FRONT BUMPER

COMPONENTS
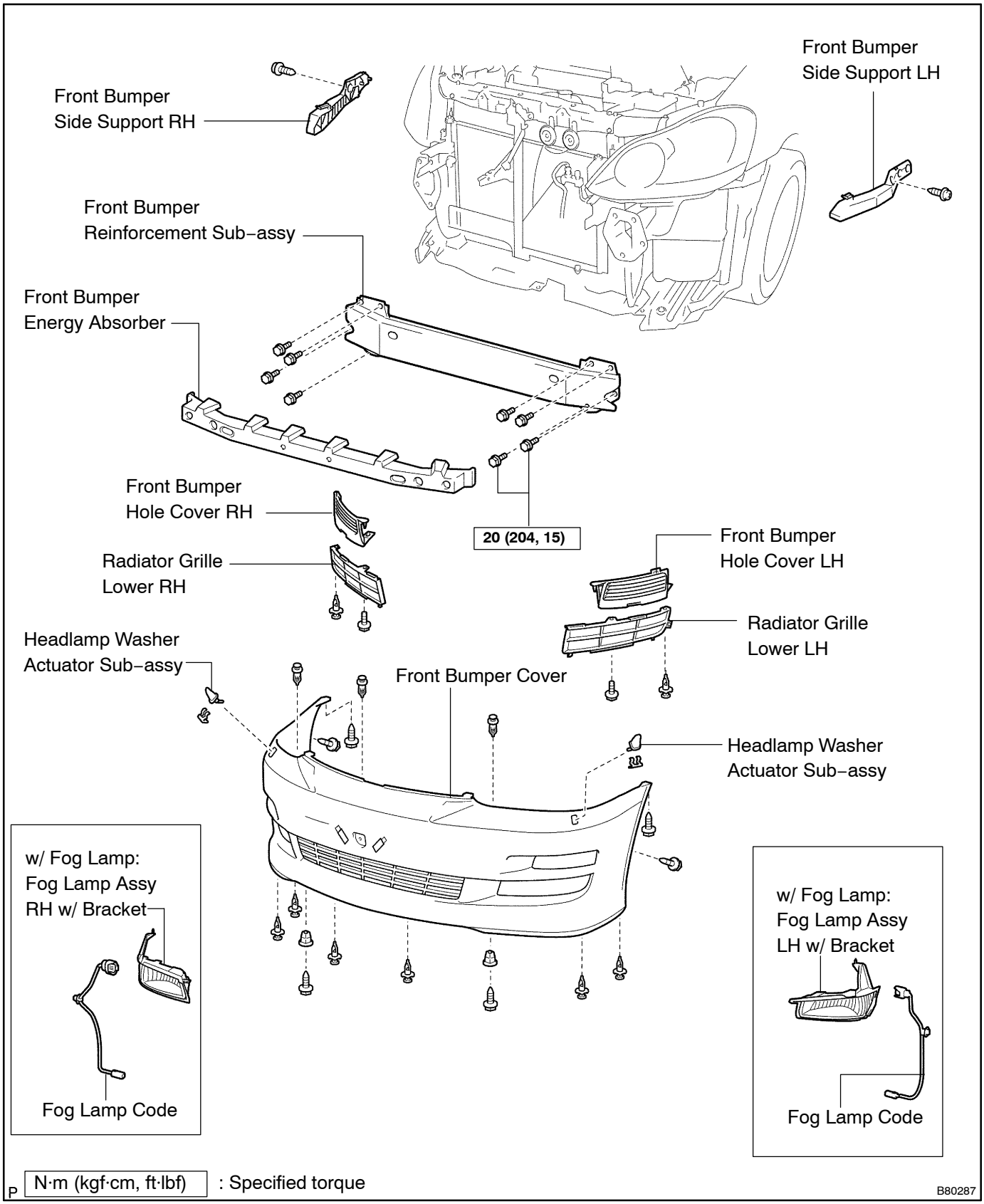
7617G–01