REAR NO. 1 SEAT ASSY LH (3 TUMBLE AND DETACHABLE SEAT TYPE)

COMPONENTS
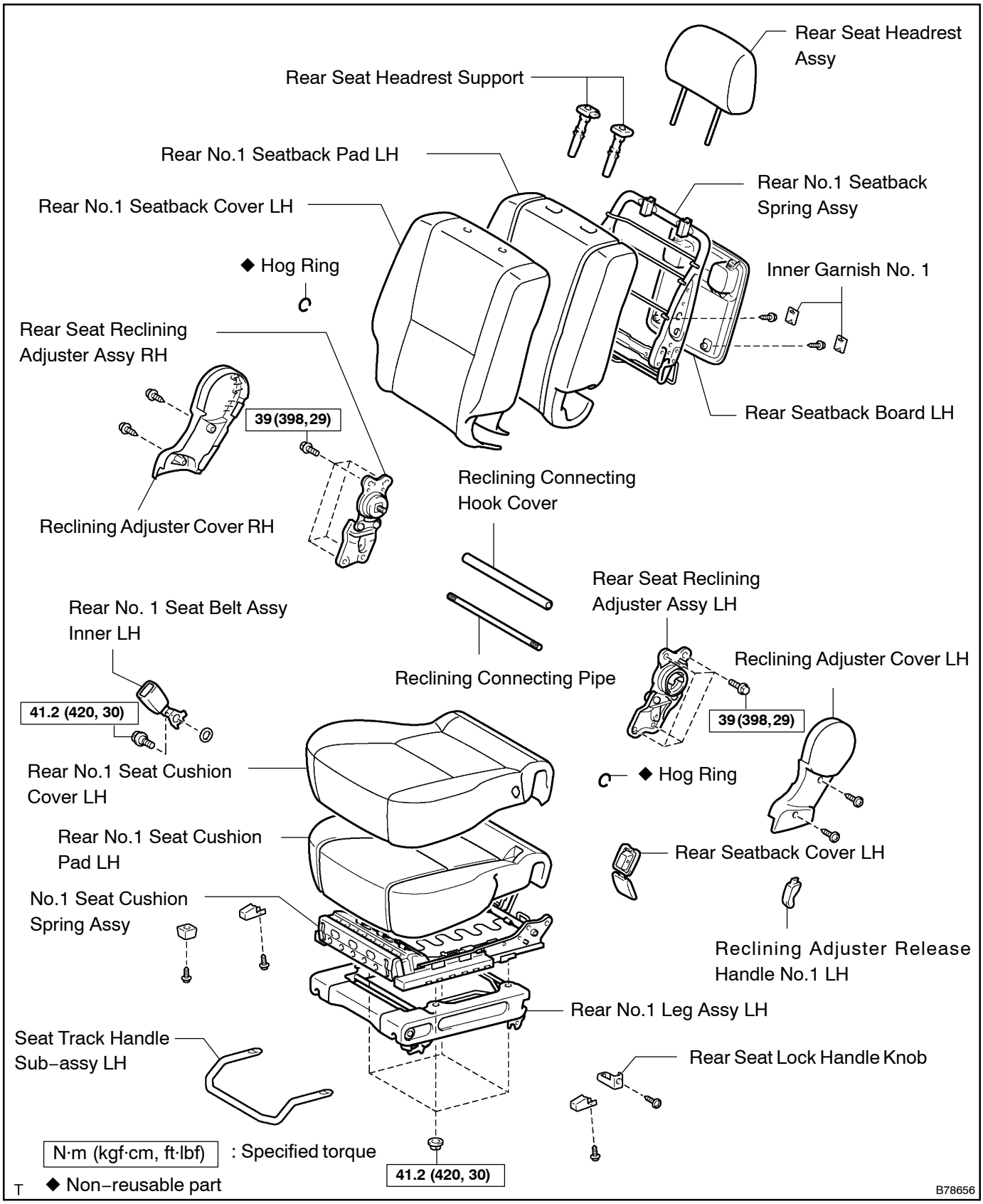
720S0–01