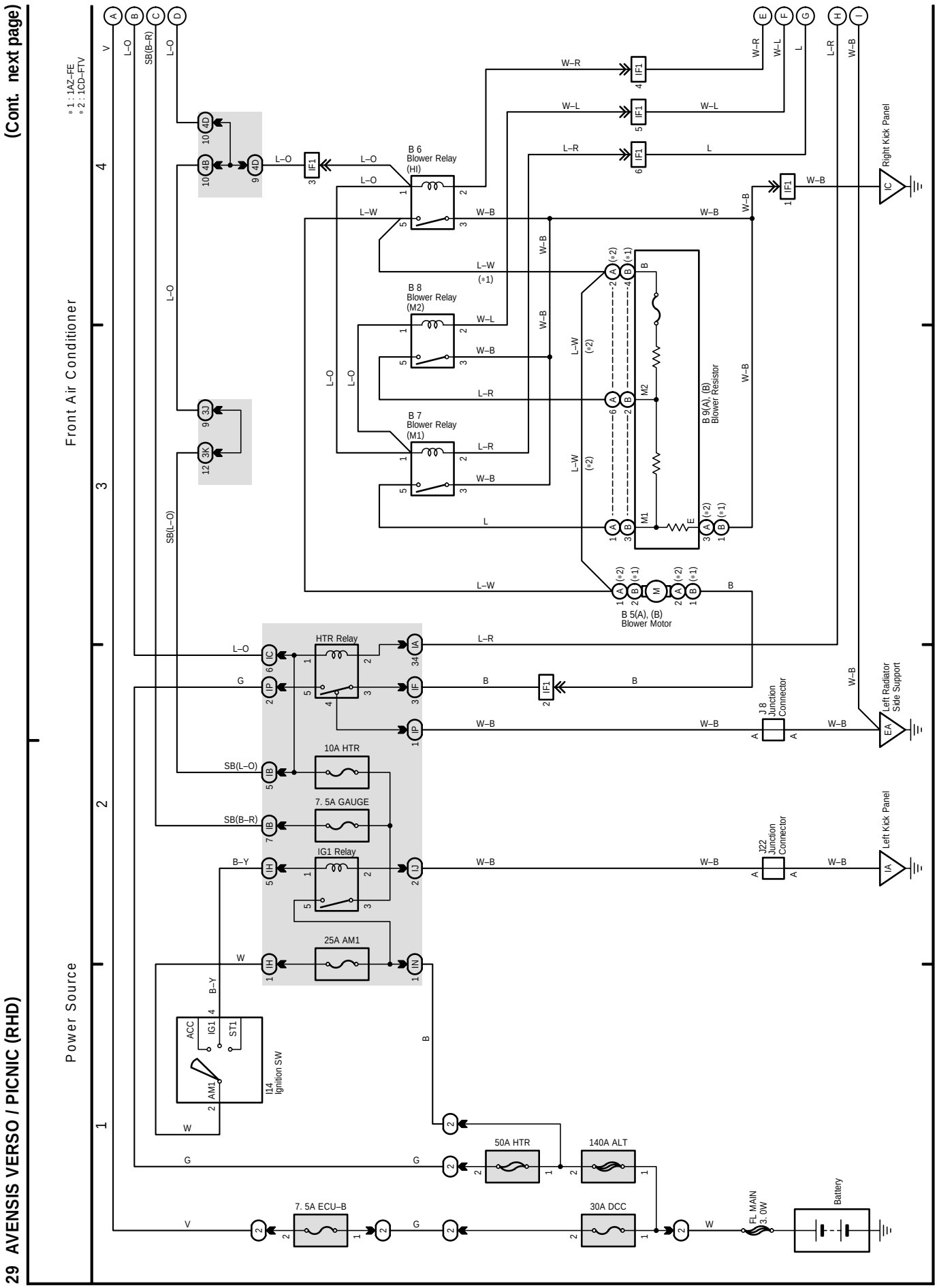
(Cont. next page)
29 AVENSIS VERSO / PICNIC (RHD)
Front Air Conditioner
Power Source
* 1 : 1AZ–FE
* 2 : 1CD–FTV
B 6
Blower Relay
(HI)
B 8
Blower Relay
(M2)
B 7
Blower Relay
(M1)
B 9(A), (B)
Blower Resistor
B 5(A), (B)
Blower Motor
HTR Relay
10A HTR
7. 5A GAUGE
IG1 Relay
25A AM1
I14
Ignition SW
50A HTR
140A ALT
7. 5A ECU–B
30A DCC
FL MAIN
3. 0W
Battery
Right Kick Panel
Left Radiator
Side Support
J8
Junction
Connector
Left Kick Panel
J22
Junction
Connector
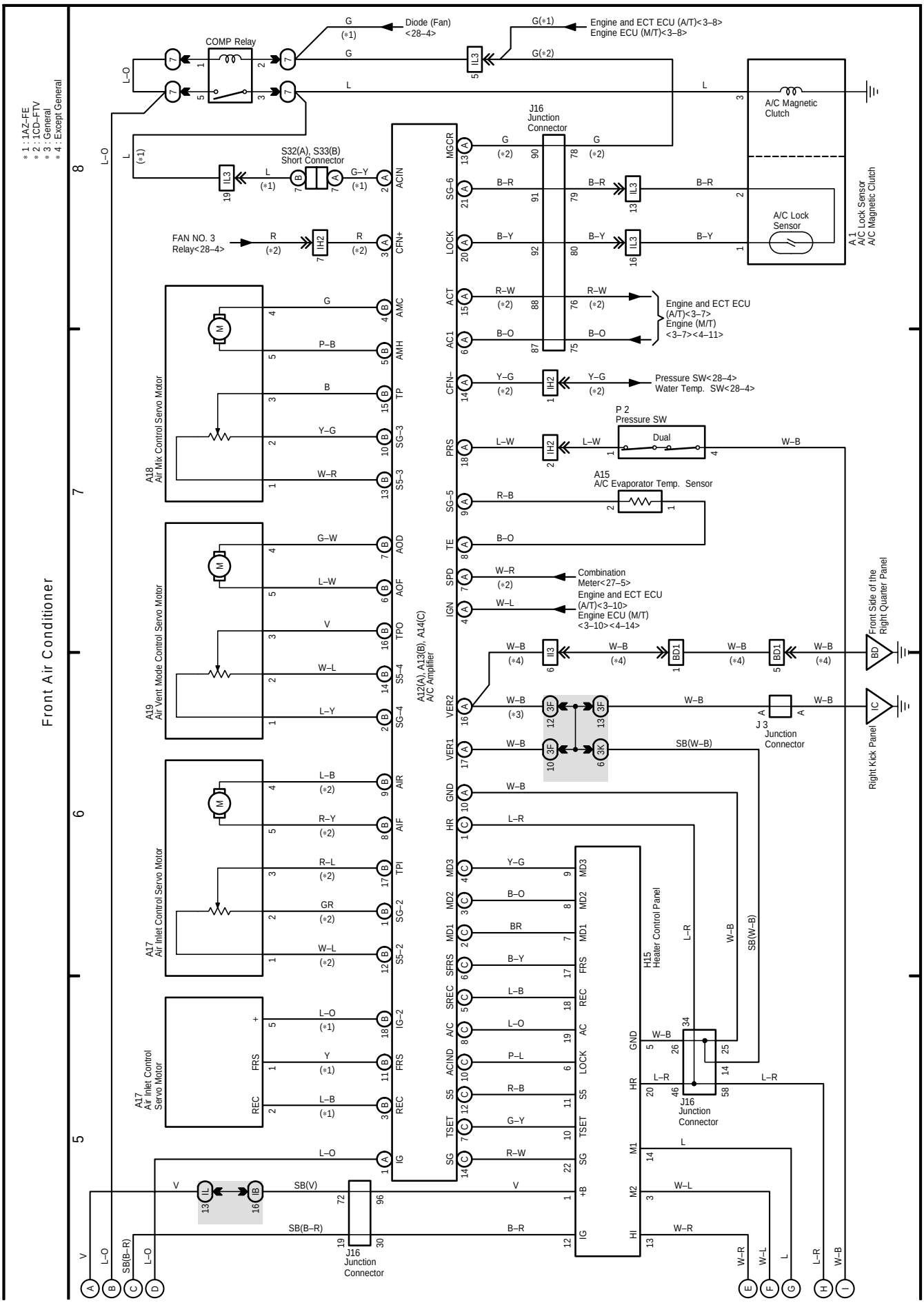
29 AVENSIS VERSO / PICNIC (RHD) (Cont' d)