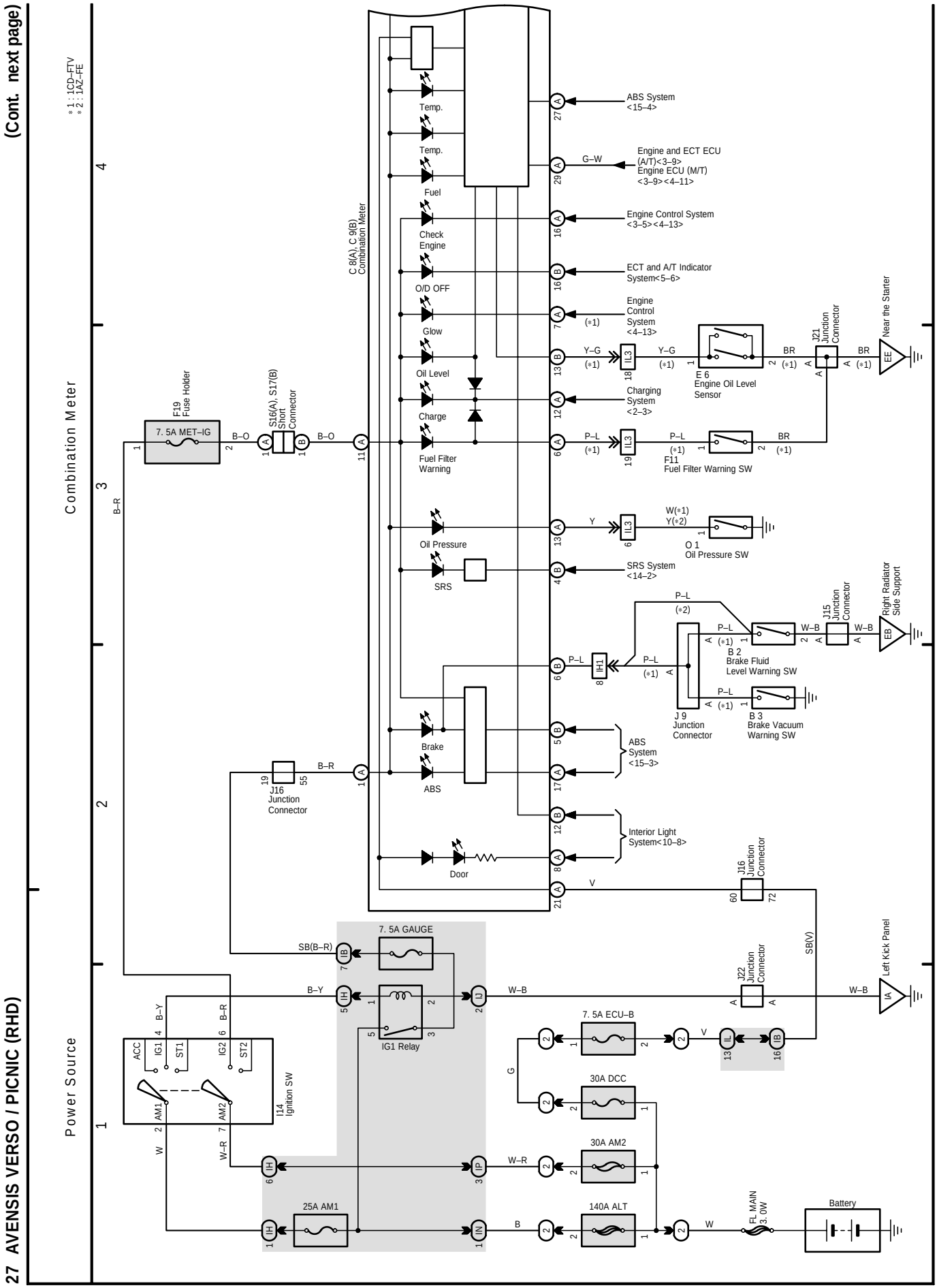
(Cont. next page)
*1 : 1CD–FTV
*2 : 1AZ–FE
Combination Meter
Power Source
Temp.
Temp.
Fuel
Check Engine
O/D OFF
Glow
Oil Level
Charge
Fuel Filter Warning
Oil Pressure
SRS
Brake
ABS
Door
C 8(A), C 9(B) Combination Meter
ABS System <15–4>
Engine and ECT ECU (A/T)<3–9> Engine ECU (M/T) <3–9><4–11>
Engine Control System <3–5><4–13>
ECT and A/T Indicator System<5–6>
Engine Control System <4–13>
Charging System <2–3>
SRS System <14–2>
ABS System <15–3>
Interior Light System<10–8>
F19 Fuse Holder
7. 5A MET–IG
S16(A), S17(B) Short Connector
J16 Junction Connector
E 6 Engine Oil Level Sensor
J21 Junction Connector
Near the Starter
F11 Fuel Filter Warning SW
O 1 Oil Pressure SW
B 2 Brake Fluid Level Warning SW
J15 Junction Connector
Right Radiator Side Support
J 9 Junction Connector
B 3 Brake Vacuum Warning SW
J22 Junction Connector
Left Kick Panel
7. 5A GAUGE
IG1 Relay
7. 5A ECU–B
30A DCC
30A AM2
140A ALT
25A AM1
I14 Ignition SW
FL MAIN 3. 0W
Battery
27 AVENSIS VERSO / PICNIC (RHD)

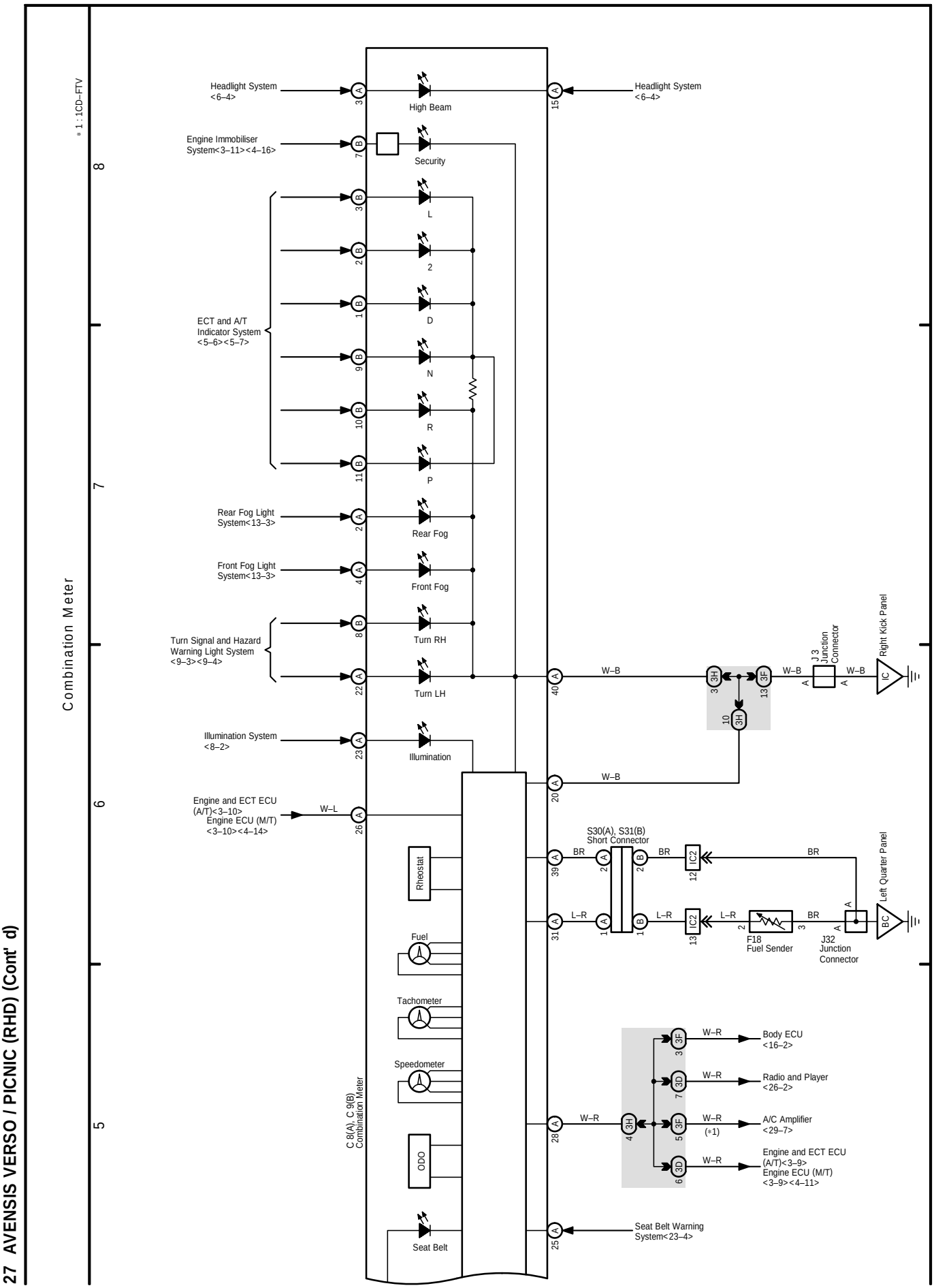
27 AVENSIS VERSO / PICNIC (RHD) (Cont' d)
Combination Meter
* 1 : 1CD–FTV
Headlight System <6–4>
High Beam
Engine Immobiliser System<3–11><4–16>
Security
ECT and A/T Indicator System <5–6><5–7>
L
2
D
N
R
P
Rear Fog Light System<13–3>
Rear Fog
Front Fog Light System<13–3>
Front Fog
Turn Signal and Hazard Warning Light System <9–3><9–4>
Turn RH
Turn LH
Illumination System <8–2>
Illumination
Engine and ECT ECU (A/T)<3–10> Engine ECU (M/T) <3–10><4–14>
W–L
Rheostat
Fuel
Tachometer
Speedometer
ODO
Seat Belt
C 8(A), C 9(B) Combination Meter
W–B
J 3 Junction Connector
Right Kick Panel
S30(A), S31(B) Short Connector
BR
L–R
IC2
F18 Fuel Sender
J32 Junction Connector
Left Quarter Panel
W–R
Body ECU <16–2>
Radio and Player <26–2>
A/C Amplifier <29–7>
(*1)
Engine and ECT ECU (A/T)<3–9> Engine ECU (M/T) <3–9><4–11>
Seat Belt Warning System<23–4>