ECT and A/T Indicator (RHD)

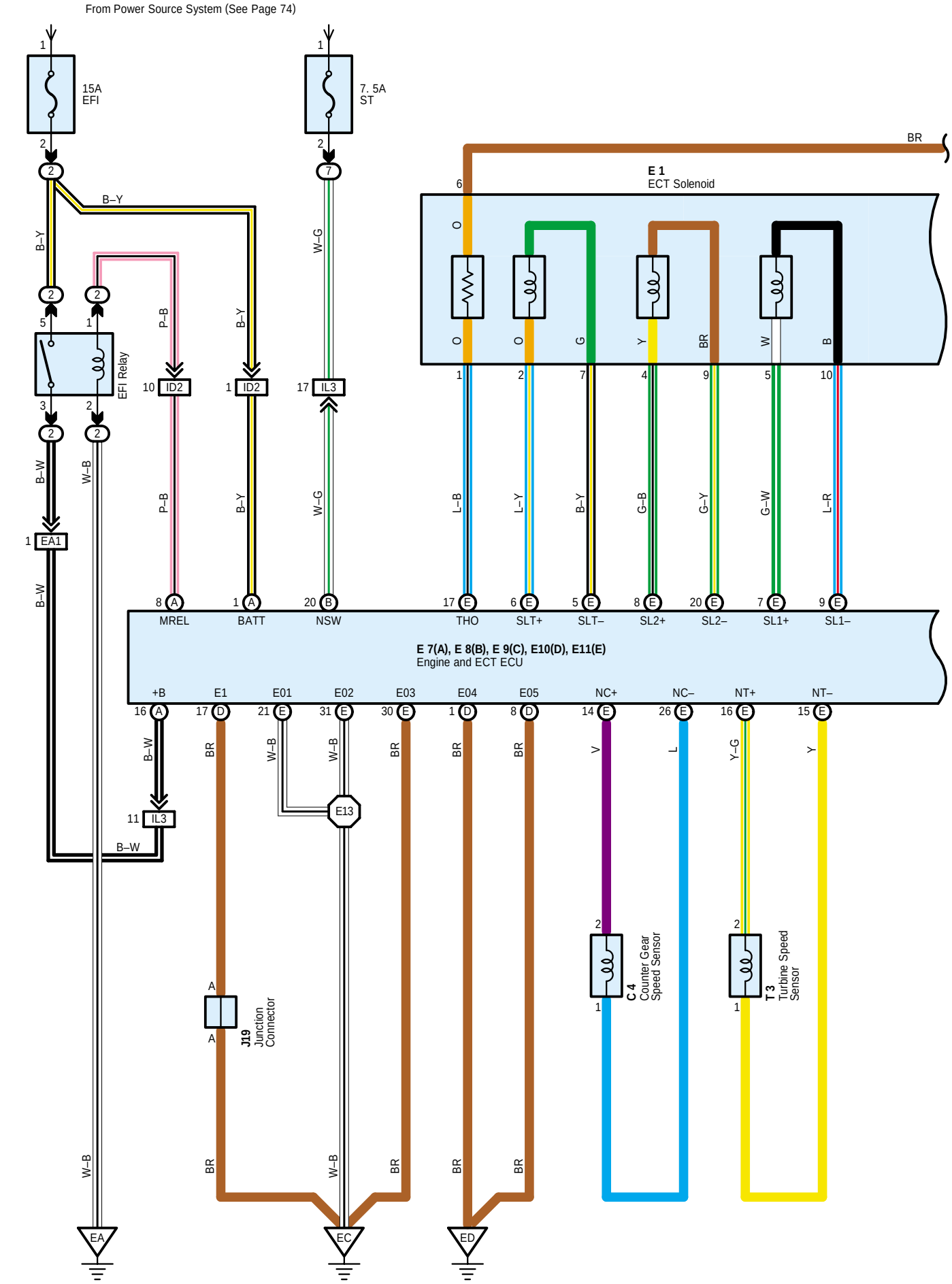

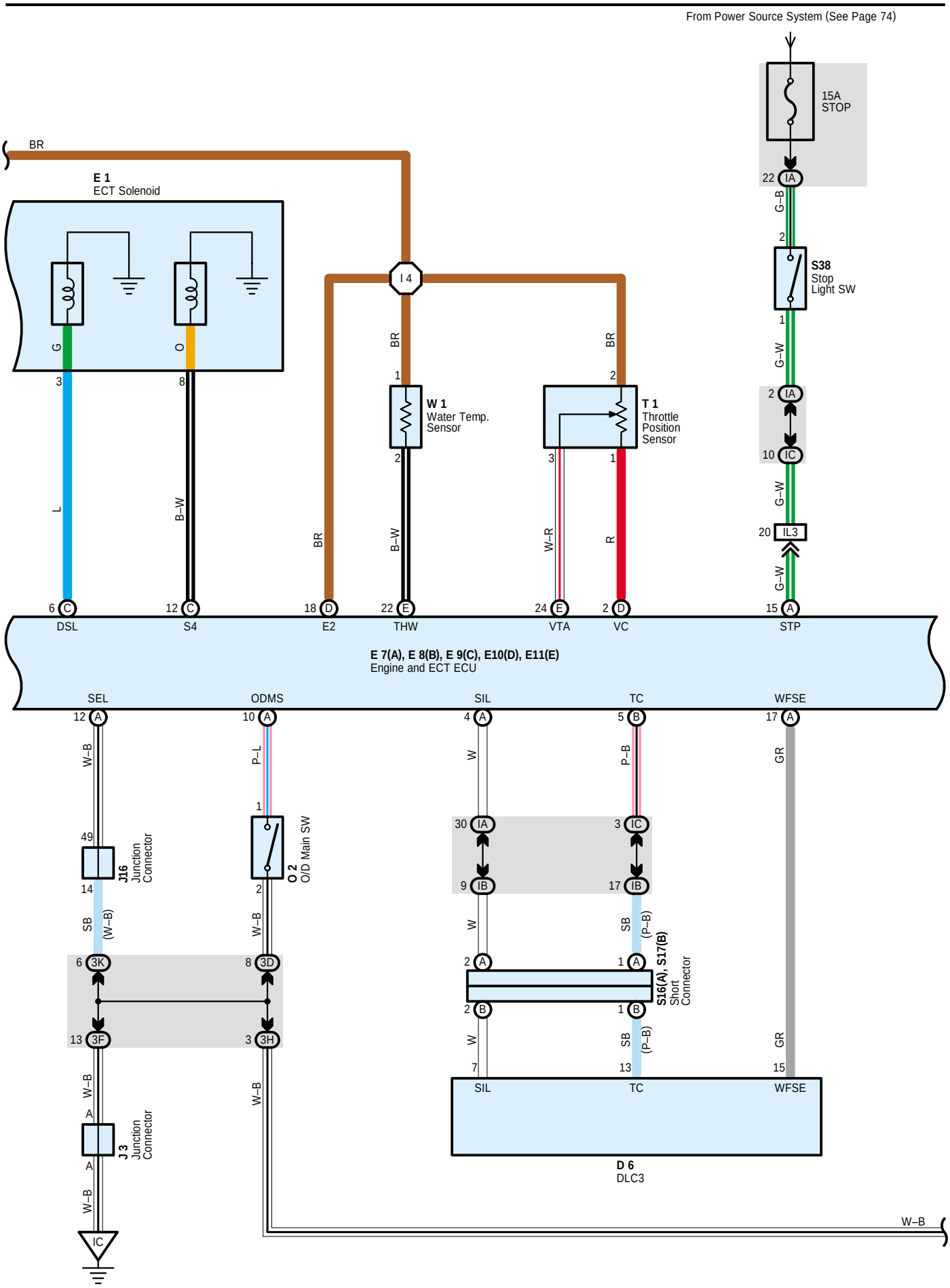
From Power Source System (See Page 74)
15A
STOP
22 IA
G–B
2
S38
Stop
Light SW
1
G–W
2 IA
10 IC
G–W
20 IL3
G–W
15 A
STP
BR
E 1
ECT Solenoid
G
O
3
8
L
B–W
I 4
BR
1
W 1
Water Temp.
Sensor
2
B–W
BR
2
T 1
Throttle
Position
Sensor
3
1
W–R
R
6 C
DSL
12 C
S4
18 D
E2
22 E
THW
24 E
VTA
2 D
VC
E 7(A), E 8(B), E 9(C), E10(D), E11(E)
Engine and ECT ECU
SEL
ODMS
SIL
TC
WFSE
12 A
W–B
49
J16
Junction
Connector
14
SB
(W–B)
6 3K
13 3F
W–B
A
J 3
Junction
Connector
A
W–B
IC
10 A
P–L
1
O 2
O/D Main SW
2
W–B
8 3D
3 3H
W–B
4 A
W
30 IA
9 IB
W
2 A
2 B
W
7
SIL
5 B
P–B
3 IC
17 IB
SB
(P–B)
1 A
1 B
SB
(P–B)
13
TC
S16(A), S17(B)
Short
Connector
17 A
GR
GR
15
WFSE
D 6
DLC3
W–B

ECT and A/T Indicator (RHD)

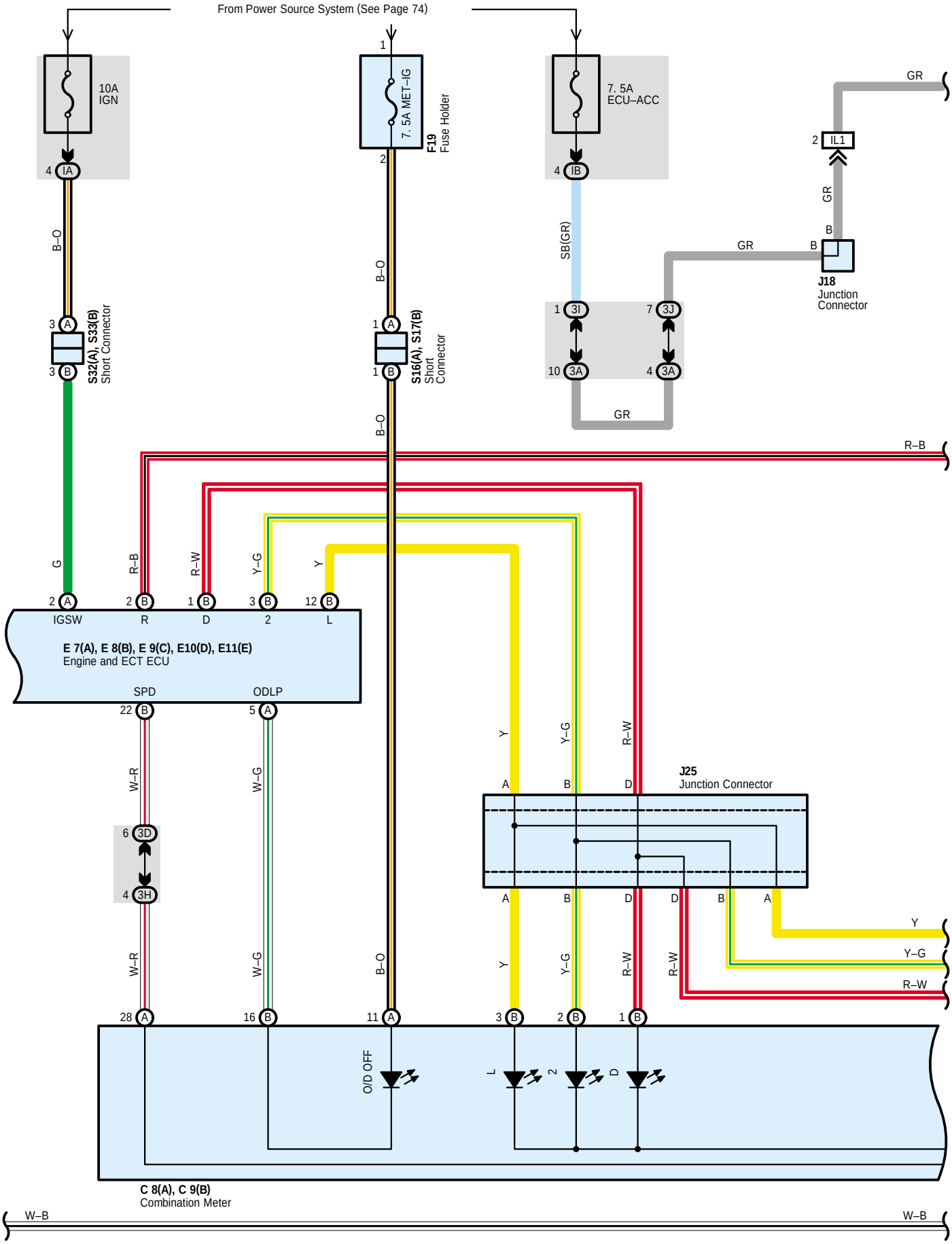

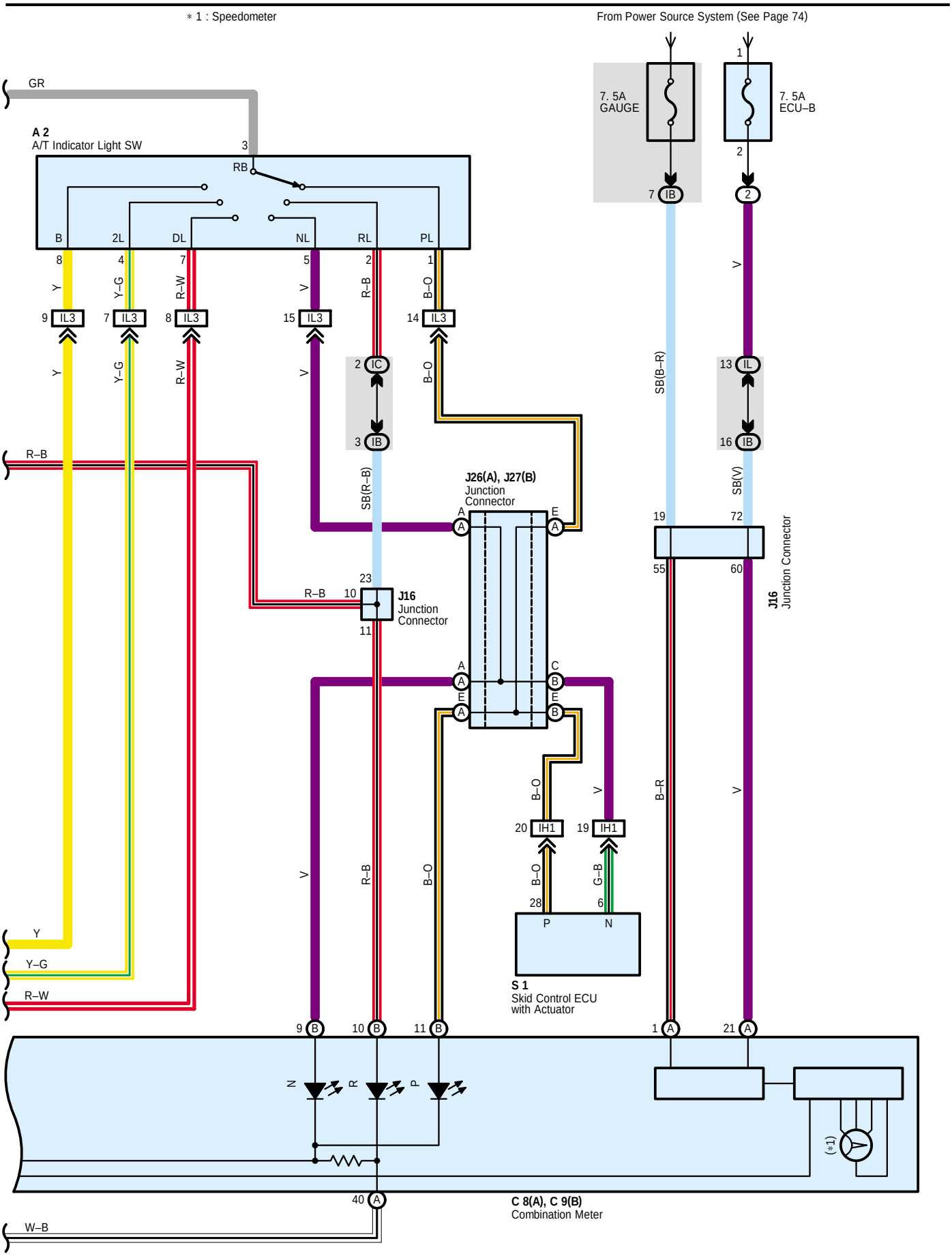
* 1 : Speedometer
From Power Source System (See Page 74)
GR
A 2
A/T Indicator Light SW
RB
B
2L
DL
NL
RL
PL
7. 5A
GAUGE
7. 5A
ECU–B
IL3
IC
IB
IL
J26(A), J27(B)
Junction
Connector
J16
Junction
Connector
SB(R–B)
SB(B–R)
SB(V)
R–B
Y
Y–G
R–W
B–O
B–R
V
IH1
S 1
Skid Control ECU
with Actuator
C 8(A), C 9(B)
Combination Meter
W–B
(*1)