ZOOM-ZOOM

8S06

Form No. 8S06-EA-03H (Part No. 9999-95-029C-04)

北米　英

Mazda MPV Owner's Manual 2004

mazda

2004
Mazda MPV
Owner's Manual

▼Operating Tips for CD Player/In-Dash CD Changer

Condensation phenomenon

Immediately after turning on the heater when the vehicle is cold, the CD or optical components (prism and lens) in the CD player/changer may become clouded with condensation. At this time, the CD will eject immediately when placed in the unit. A clouded CD can be corrected simply by wiping it with a soft cloth. Clouded optical components will clear naturally in about an hour. Wait for normal operation to return before attempting to use the unit.

Handling the CD player/In-dash CD changer

The following precautions should be observed.

- Do not spill any liquid on the audio system.

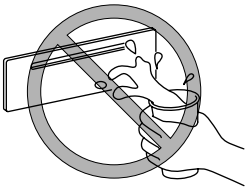

- Do not insert any objects, other than CDs, into the slot.

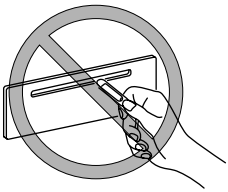

- The CD revolves at high speed within the unit. Defective (cracked or badly bent) CDs should never be used.

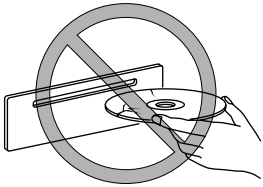

- Do not use non-conventional discs such as heart-shaped, octagonal discs, etc. The CD player/changer could be damaged.

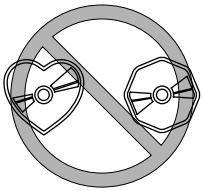

- A new CD may have rough edges on its inner and outer perimeters. If a disc with rough edges is used, proper setting will not be possible and the CD player/changer will not play the CD. Remove the rough edges in advance by using a ball-point pen or pencil as shown below. To remove the rough edges, rub the side of the pen or pencil against the inner and outer perimeter of the CD.

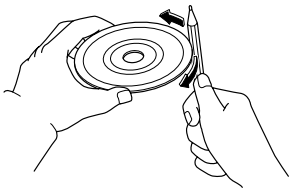

- When driving over uneven surfaces, the sound may jump.

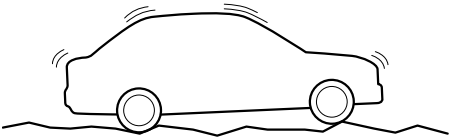

- The CD player/changer has been designed to play CDs bearing the identification logo as shown. No other discs can be played.

- Be sure never to touch the signal surface when handling the CDs. Pick up a CD by grasping the outer edge or the edge of the hole and the outer edge.

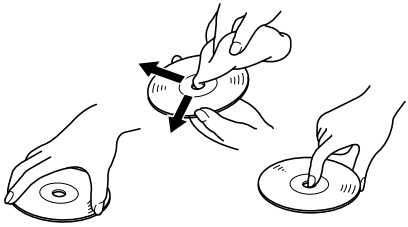

- Do not stick paper or tape on the CD. Avoid scratching the reverse side (the side without a label).
- Dust, finger smudges, and dirt can decrease the amount of light reflected from the signal surface, thus affecting sound quality. If the CD should become soiled, gently wipe it with a soft cloth from the center of the CD to the edge.
- Do not use record sprays, antistatic agents, or household spray cleaners. Volatile chemicals such as benzine and thinner can also damage the surface of the CD and must not be used. Anything that can damage, warp, or fog plastic should never be used to clean CDs.
- CDs, like traditional audio records, are made of plastic. To avoid warping, keep the CDs in their cases and do not store them where they will be exposed to direct sunlight.
- The CD player/changer ejects the CD if the CD is inserted upside down. Also dirty and/or defective CDs may be ejected.
- 8 cm (3 in) CDs and CD accessories (e.g. 8 cm disc adapter) cannot be used in the CD player/changer.
- Do not insert cleaning discs in the CD player/changer.
- Do not insert any disc with a peel-off or seal on it.

Audio Set*

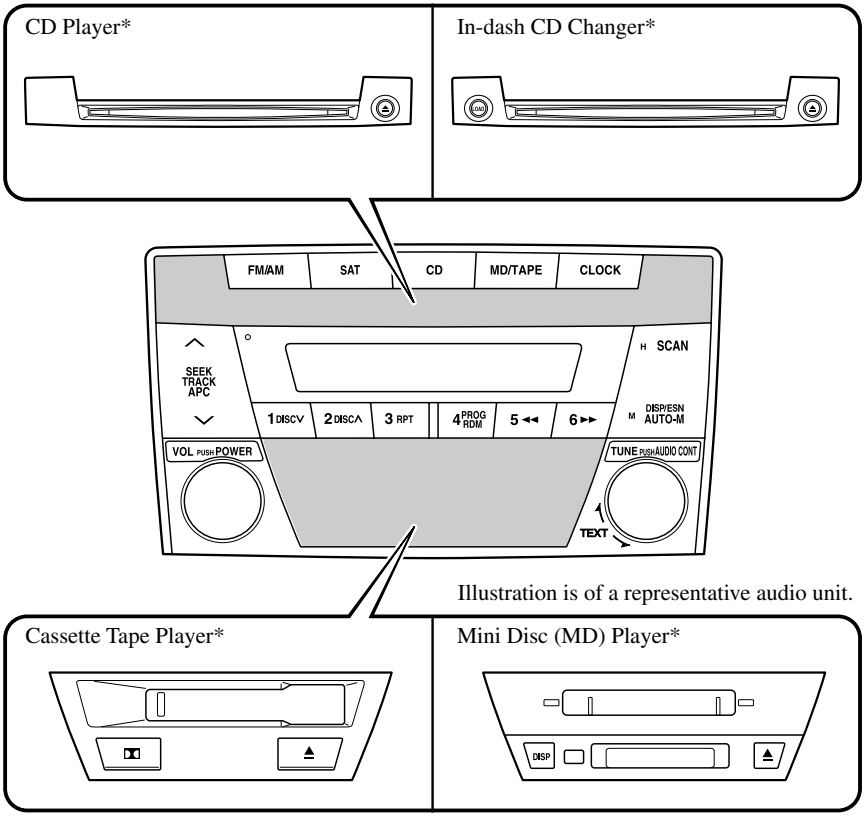

Illustration is of a representative audio unit.

Power/Volume/Sound Controls 6-22
Clock 6-24
Operating the Radio 6-26
Operating the Cassette Tape Player* 6-28
Operating the Mini Disc (MD) Player* 6-30
Operating the Compact Disc (CD) Player* 6-32
Operating the In-Dash CD Changer* 6-34
Error Indications 6-37

*Some models.

▼Power/Volume/Sound Controls

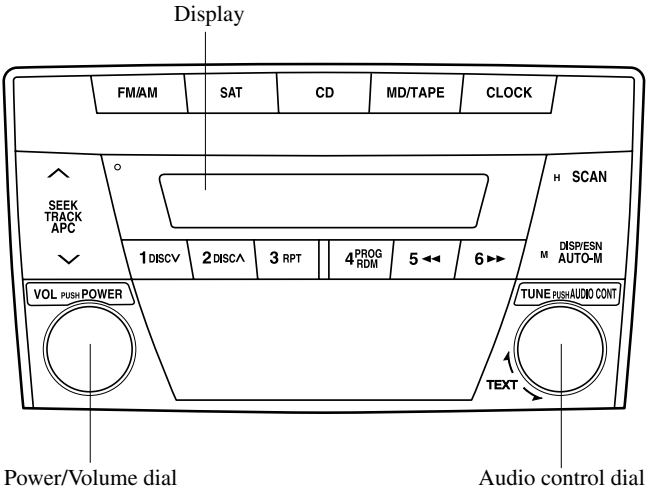

Power ON/OFF

Turn the ignition switch to the ACC or ON position.

Press the power/volume dial to turn the audio system on.
Press the power/volume dial again to turn the audio system off.

NOTE
To prevent the battery from being discharged, do not leave the audio system on for a long period when the engine is not running.

Volume adjustment

To adjust the volume, turn the power/volume dial.

Turn the power/volume dial to the right to increase volume, to the left to decrease it.

Audio sound adjustment

1. Press the audio control dial to select the function. The selected function will be indicated.
2. Turn the audio control dial to adjust the selected functions as follows:

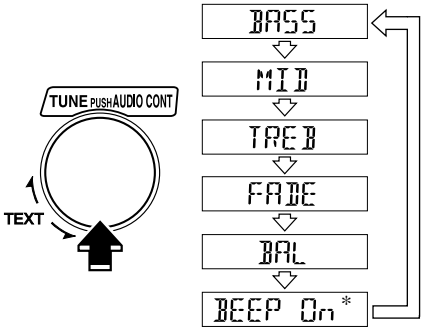

* Depending on the mode selected, the indication changes.

Indication	Turn Left	Turn Right
BASS	Decrease bass	Increase bass
MID	Decrease mid-range	Increase mid-range
TREB	Decrease treble	Increase treble
FADE	Shift the sound to the front	Shift the sound to the rear
BAL	Shift the sound to the left	Shift the sound to the right
BEEP	OFF	ON

NOTE

About 5 seconds after selecting any mode, the volume function will be automatically selected. To reset bass, mid-range, treble, fade and balance, press the audio control dial for 2 seconds. The unit will beep and "CLEAR" will be displayed.

BEEP setting

The beep-sound when operating the audio system can be set on or off.

▼ Clock

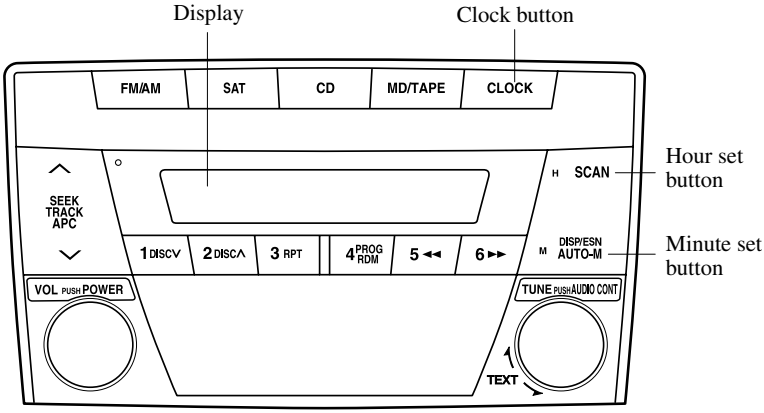

Setting the time

The clock can be set at any time when the ignition switch is in the ACC or ON position.

1. To adjust the time, press the clock button (CLOCK) for about 2 seconds until a beep is heard.
   The clock's current time will flash.

NOTE
To select 12-hour or 24-hour clock time, turn the audio control dial while the clock display is flashing. After selecting the desired display, press the audio control dial to return to the flashing clock display.

2. To advance the hours, press the hour set button (H). To advance the minutes, press the minute set button (M) while the time is flashing.
3. Press the clock button (CLOCK) again to start the clock.

Exact hour adjustment

1. To set the exact hour, press the clock button (CLOCK) for about 2 seconds until a beep is heard.
   The clock's current time will flash.
2. Press the clock button (CLOCK) again and the time will be adjusted as follows:
   (Example)
   12:01—12:29→12:00
   12:30—12:59→1:00

NOTE
• When the clock button (CLOCK) is released, the seconds are reset to "00". • If the power supply to the unit is interrupted (if the fuse blows or the vehicle's battery is disconnected), the clock will need to be reset.

Changing the display mode

The display on the unit can be changed by pressing the clock button (CLOCK). This alternates the display between clock mode and normal mode. When the clock mode has been selected, the time will be displayed.

NOTE
The displays when using the audio differ in clock mode and normal mode.

▼Operating the Radio

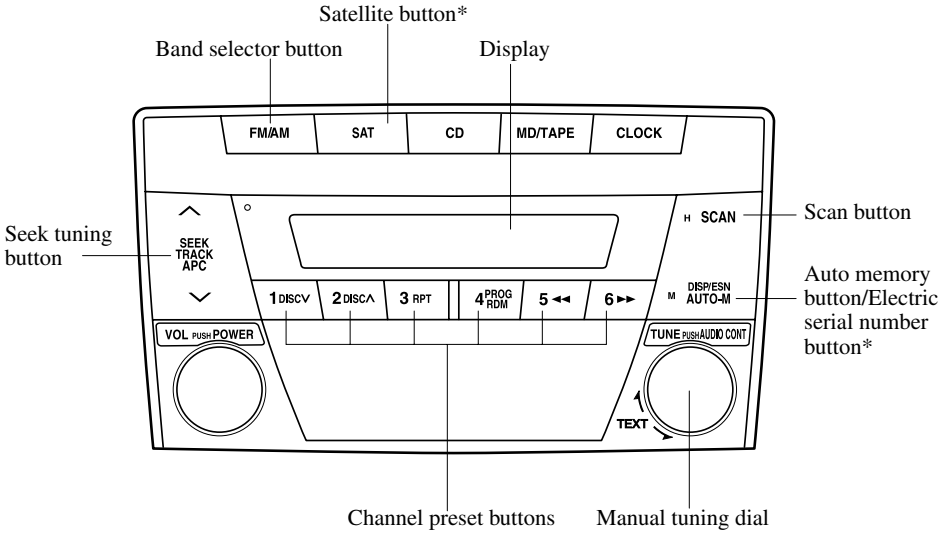

*Used on vehicles equipped with the separately sold Sirius digital satellite radio unit. For information on use, read the manual accompanying the Sirius unit.

Radio ON

Press a band selector button (**FM/AM**) to turn the radio on.

Band selection

Successively pressing the band selector button (**FM/AM**) switches the bands as follows: FM1→FM2→AM.

The selected mode will be indicated. If FM stereo is being received, "ST" will be displayed.

NOTE
If the FM broadcast signal becomes weak, reception automatically changes from STEREO to MONO for reduced noise, and the "ST" indicator will go out.

Tuning

The radio has the following tuning methods: Manual, Seek, Scan, Preset channel, and Auto memory tuning. The easiest way to tune stations is to set them on preset channels.

NOTE
If the power supply is interrupted (fuse blows or the battery is disconnected), the preset channels will be canceled.

Manual tuning

Turning the manual tuning dial will change the frequency higher or lower.

Seek tuning

Pressing the seek tuning button (∧, ∨) will cause the tuner to seek a higher or lower frequency automatically.

NOTE
If you continue to press and hold the button, the frequency will continue changing without stopping.

Scan tuning

Press the scan button (SCAN) to automatically sample strong stations. Scanning stops at each station for about 5 seconds. To hold a station, merely press the scan button (SCAN) again during this interval.

Preset channel tuning

The 6 preset channels can be used to store 6 AM and 12 FM stations.

1. To set a channel first select AM, FM1, or FM2. Tune to the station you want.
2. Depress a channel preset button for about 2 seconds until a beep is heard. The preset channel number and station frequency will be displayed. The station is now held in the memory.

NOTE
When the clock is displayed, the preset channel number will not be displayed.

3. Repeat this operation for the other stations and bands you want to store. To tune one in the memory, select AM, FM1, or FM2 and then press its channel preset button. The station frequency and the channel number will be displayed.

NOTE
If the power supply is interrupted (fuse blows or the battery is disconnected), the preset channels will be canceled.

Auto memory tuning

This is especially useful when driving in an area where the local stations are not known. Additional AM/FM stations can be stored without disturbing the previously set channels.

Press and hold the auto memory button (AUTO-M) for about 2 seconds until a beep is heard; the system will automatically scan and temporarily store up to 6 stations with the strongest frequencies in each selected band in that area.

After scanning is completed, the station with the strongest frequency will be tuned and its frequency displayed.
Press and release the auto memory button (AUTO-M) to recall stations from the auto-stored stations. One stored station will be selected each time; its frequency and channel number will be displayed.

NOTE
• When the clock is displayed, the preset channel number will not be displayed. • If no stations can be tuned after scanning operations, "A" will be displayed.

▼Operating the Cassette Tape Player*

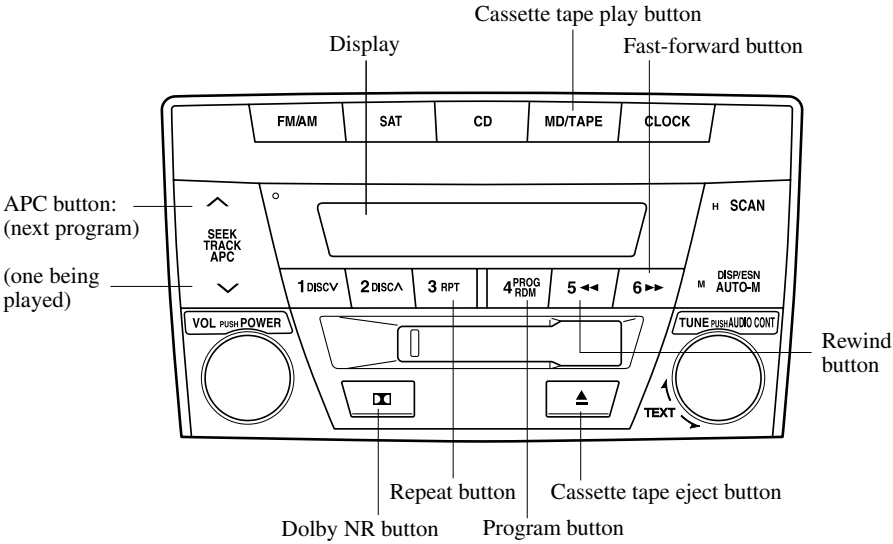

Cassette tape insert

Insert the cassette tape into the slot, open edge to the right and cassette tape will begin play and "TAPE" will be displayed. At the end of the cassette tape, the unit automatically reverses cassette tape play. When ⊔ ⊔ is lit, the cassette tape's top side is playing. When ⊔ ⊔ is lit, the bottom side is on.

NOTE
When a metal tape is inserted, the player will automatically compensate for it.

Playing

Press the cassette tape play button (MD/TAPE) to start playing when a cassette tape is in the unit. If there isn't a cassette tape in the unit when the cassette tape play button (MD/TAPE) is pressed, "No TAPE" will flash on and off in sequence.

Dolby noise reduction

When using a tape with Dolby NR*, push the Dolby NR button (DD). The DD symbol will be displayed. To play a tape without Dolby NR, push the button once again.

 *Some models.

* Noise reduction system manufactured under license from Dolby Laboratories Licensing Corporation.
  Dolby and the double-D symbol DD are trademarks of Dolby Laboratories Licensing Corporation.

Ejecting the cassette tape

Press the cassette tape eject button (⏏) to eject the cassette tape.

NOTE
The cassette tape can be ejected when the ignition switch is in the OFF position.

Fast-forward/Rewind

Press the fast-forward button (►►) to fast-forward.
Press the rewind button (◄◄) to rewind.
To stop this operation and play the cassette tape, press the button again.

NOTE
When the cassette tape ends during fast-forward or rewind, it automatically stops and starts playing.

Reversing

Press the program button (PROG) to change cassette tape-playing direction.

NOTE
When the cassette tape ends, the unit automatically reverses play.

Automatic program control (APC)

APC is used to find the beginning of either the next program or the one being played.

Press the APC button (∧) to the beginning of the next selection.
Press the APC button (∨) to the beginning of the one being played. To stop this operation and play the cassette tape, press the button again.

If APC detects 4 seconds of blank space it will automatically advance the tape to the next selection.

NOTE
APC may not operate properly if • A tape was recorded at a low level. • A tape has long, silent intervals. • A tape is a live recording. • A tape has very short intervals of less than 3 seconds.

Repeat play

This operation makes it possible to listen to a selection repeatedly.

Press the repeat button (RPT) during play.
The current selection playing will be repeated ("RPT" will be displayed).
Press the repeat button (RPT) once again to cancel repeat play.

NOTE
RPT may not operate properly if • A tape was recorded at a low level. • A tape has long, silent intervals. • A tape is a live recording. • A tape has very short intervals of less than 3 seconds.

▼Operating the Mini Disc (MD) Player*

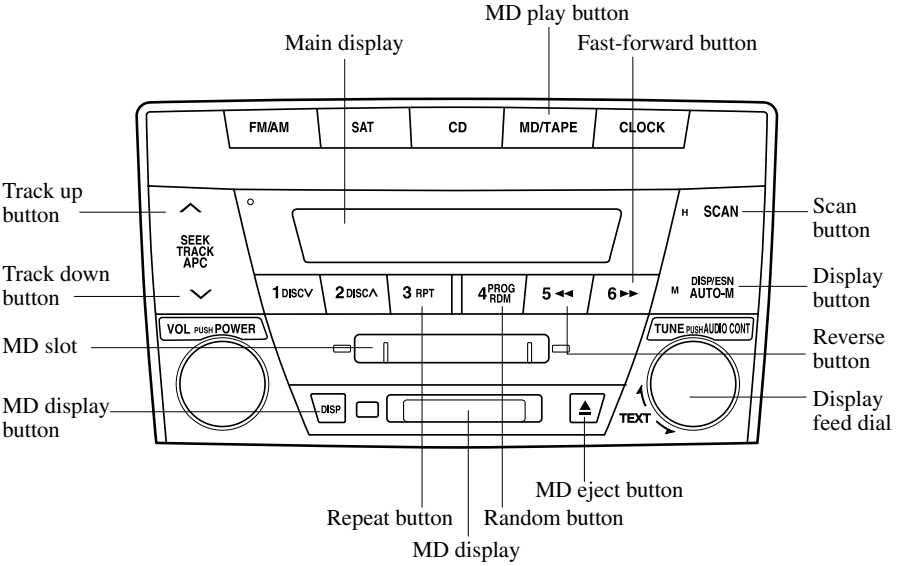

Inserting the MD

Insert the MD, label-side up with the arrow pointed to the slot. The auto-loading mechanism will set the MD and begin play. There will be a short lapse before play begins while the player reads the digital signals on the MD.
The track number and the elapsed play back time for the current track will be displayed on the display.

NOTE
When the clock is displayed, the elapsed play back time will not be displayed. To display the elapsed play back time, turn the audio control dial to the right. Turn the dial to the left to return to the previous display.

Playing

Press the MD play button (MD/TAPE) to start playing when a MD is in the unit.

Ejecting the MD

Press the MD eject button (⏏) to eject the MD.

Fast-forward/Reverse

Press and hold the fast-forward button (►►) to advance through a track at high speed.
Press and hold the reverse button (◄◄) to reverse through a track at high speed.

Track search

Press the track up button (∧) once to skip forward to the beginning of the next track.
Press the track down button (∨) once to skip back to the beginning of the current track.

 *Some models.

Music scan

This feature helps to find a program by playing about the first 10 seconds of each track.

Press the scan button (SCAN) during play to start scan play operation (the track number will flash).
Press the scan button (SCAN) once again to cancel scan play.

NOTE
If the unit is left in scan, normal play will resume where scan was selected.

Repeat play

This feature makes it possible to listen to a selection repeatedly.

Press the repeat button (RPT) during play. The current selection will be repeated ("RPT" will be displayed).
Press the repeat button (RPT) once again to cancel repeat play.

Random play

This feature allows the MD player to randomly select the order of the songs.

Press the random button (RDM) during play. The next selection will be randomly selected ("RDM" will be displayed).
Press the random button (RDM) once again to cancel random play.

Changing the display

Display

To change the display during MD play, press the display button (DISP) to advance through each of the following displays:
Track number/Elapsed play back time→Song title→Disc title.

NOTE
• If there is no song or disc title recorded on the MD, "No TITLE" will be displayed. • The display can only display English (including numerals) one-byte characters. If any other character is included "No TITLE" will be displayed.

When long disc or song titles cannot be completely displayed, rotate the display feed dial (TEXT) to the right.
The remainder of the title will proceed and appear on the display to the end of the title.

MD display

To change the MD display during MD play, press and hold the MD display button (DISP) for about half a second to advance through each of the following displays:
Song title→Disc title→No display.

NOTE
If there is no song or disc title recorded on the MD, "No TITLE" will be displayed.

When long disc or song titles cannot be completely displayed, press the MD display button (DISP) to display the remaining part of the title.

▼Operating the Compact Disc (CD) Player*

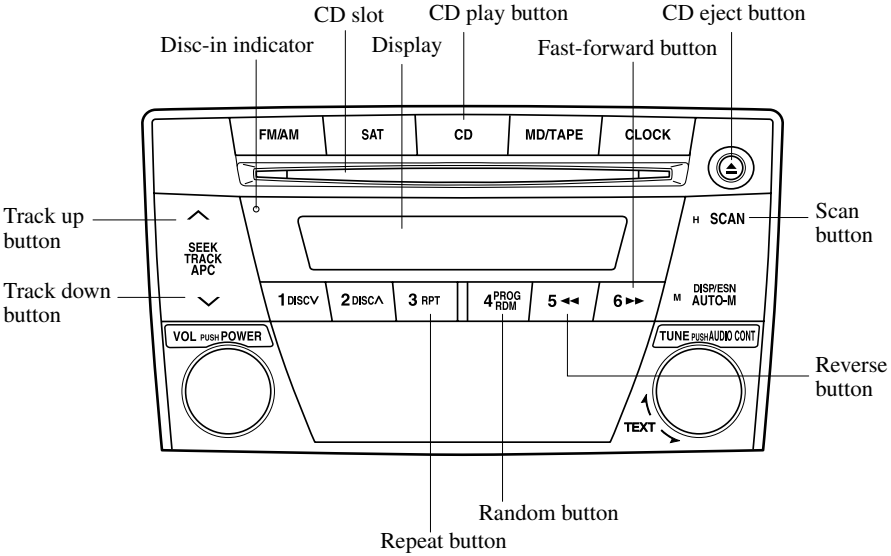

Inserting the CD

Insert the CD into the slot, label-side up. The auto-loading mechanism will set the CD and begin play. There will be a short lapse before play begins while the player reads the digital signals on the CD.
The disc-in indicator will illuminate, and the track number and the elapsed play back time for the current track will be displayed.

NOTE
When the clock is displayed, the elapsed play back time will not be displayed. To display the elapsed play back time, turn the audio control dial to the right. Turn the dial to the left to return to the previous display.

Playing

Press the CD play button (CD) to start playing when a CD is in the unit.

Ejecting the CD

Press the CD eject button (⏏) to eject the CD.

Fast-forward/Reverse

Press and hold the fast-forward button (►►) to advance through a track at high speed.
Press and hold the reverse button (◄◄) to reverse through a track at high speed.

 *Some models.

Track search

Press the track up button (∧) once to skip forward to the beginning of the next track.
Press the track down button (∨) once to skip back to the beginning of the current track.

Music scan

This feature helps to find a program by playing about the first 10 seconds of each track.

Press the scan button (SCAN) during play to start scan play operation (the track number will flash).
Press the scan button (SCAN) once again to cancel scan play.

NOTE
If the unit is left in scan, normal play will resume where scan was selected.

Repeat play

This feature makes it possible to listen to a selection repeatedly.

Press the repeat button (RPT) during play. The current selection will be repeated ("RPT" will be displayed).
Press the repeat button (RPT) once again to cancel repeat play.

Random play

This feature allows the CD player to randomly select the order of the songs.

Press the random button (RDM) during play. The next selection will be randomly selected ("RDM" will be displayed).
Press the random button (RDM) once again to cancel random play.

▼Operating the In-Dash CD Changer*

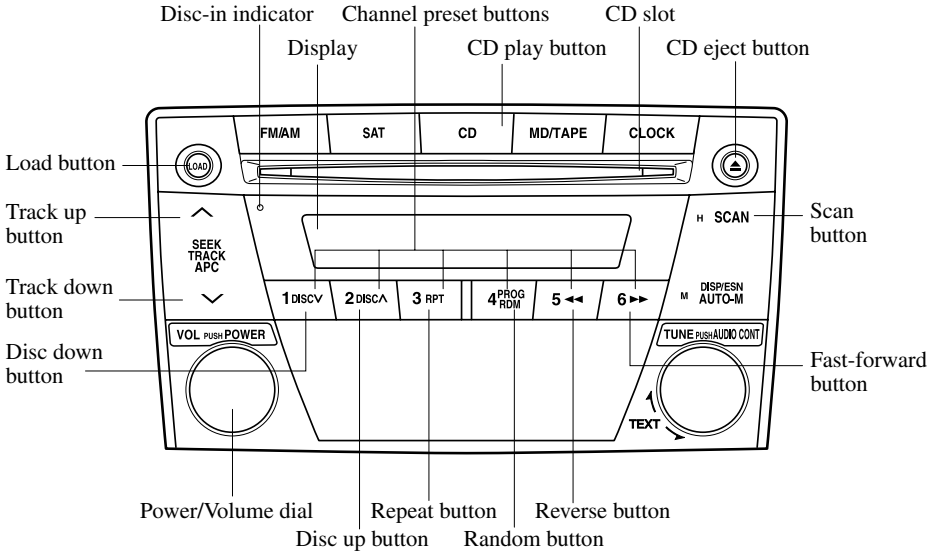

Inserting the CD

The CD must be label-side up when inserting. The auto-loading mechanism will set the CD and begin play. There will be a short lapse before play begins while the player reads the digital signals on the CD.
The disc number, the track number and the elapsed play back time for the current track will be displayed.

NOTE

- When the clock is displayed, the elapsed play back time will not be displayed. To display the elapsed play back time, turn the audio control dial to the right. Turn the dial to the left to return to the previous display.
- A CD cannot be inserted while the display reads "WAIT". A beeping sound can be heard during this waiting time. Simultaneously pressing the power/volume dial and the load button (LOAD) for about 2 seconds will turn this beeping sound ON or OFF.

 *Some models.

Normal insertion

1. Press the load button (LOAD).
2. When "In" is displayed, insert the CD.

Inserting CDs into desired tray number

1. Press and hold the load button (LOAD) for about 2 seconds until a beep is heard.
2. Press the channel preset button for the desired tray number within 5 seconds after the beep is heard.
3. When "In" is displayed, insert the CD.

NOTE
The CD cannot be inserted to the desired tray number if the number is already occupied.

Multiple insertion

1. Press and hold the load button (LOAD) for about 2 seconds until a beep is heard.
2. When "In" is displayed, insert the CD.
3. When "In" is displayed again, insert the next CD.

NOTE
The first-inserted CD will be played automatically when: • No CD is inserted within 15 seconds after "In" is displayed. • The CD trays are full.

Ejecting the CD

Normal ejection

1. Press the CD eject button (⏏). The disc number and "DISC OUT" will be displayed.
2. Pull out the CD.

NOTE
When the CD is ejected during play, the next CD will be played automatically.

Ejecting CDs from desired tray number

1. Press and hold the CD eject button (⏏) for about 2 seconds until a beep is heard.
2. Press the channel preset button for the desired CD number within 5 seconds after the beep is heard.
3. Pull out the CD.

Multiple ejection

1. Press and hold the CD eject button (⏏) for about 2 seconds until a beep is heard.
2. Wait 5 seconds or press the CD eject button (⏏) again within 5 seconds after the beep is heard.
3. Pull out the CD, then the next CD will be ejected.

NOTE
• CDs will be ejected starting with the one with the lowest number. • All CDs in the tray will be ejected continuously. • CDs can be ejected when the ignition switch is off. Press and hold the CD eject button (⏏) for about 2 seconds and all CDs will eject.

Playing

Press the CD play button (CD) to start playing when a CD is in the unit.

Fast-forward/Reverse

Press and hold the fast-forward button (►►) to advance through a track at high speed.
Press and hold the reverse button (◄◄) to reverse through a track at high speed.

Track search

Press the track up button (∧) once to skip forward to the beginning of the next track.
Press the track down button (∨) once to skip back to the beginning of the current track.

Disc search

Press the disc up button (DISC∧) to skip forward to the beginning of the next CD.
Press the disc down button (DISC∨) to skip back to the beginning of the previous CD.

Music scan

This feature helps to find a program by playing about the first 10 seconds of each track.

Press the scan button (SCAN) during play to start scan play operation (the track number will flash).
Press the scan button (SCAN) once again to cancel scan play.

NOTE
If the unit is left in scan, normal play will resume where scan was selected.

Repeat play

This feature makes it possible to listen to a selection repeatedly.

Press the repeat button (RPT) during play. The current selection will be repeated ("RPT" will be displayed).
Press the repeat button (RPT) once again to cancel repeat play.

Random play

This feature allows the CD player to randomly select the order of the songs.

Press the random button (RDM) during play. The next selection will be randomly selected ("RDM" will be displayed).
Press the random button (RDM) once again to cancel random play.

▼Error Indications

If you see an error indication on the display, find the cause in the chart. If you cannot clear the error indication, take the vehicle to an Authorized Mazda Dealer.

Indication	Cause	Solution
CHECK MD	MD is inserted upside down	Insert the MD properly. If the error indication does not disappear, consult an Authorized Mazda Dealer
CHECK MD	MD is defective	Insert another MD properly. If the error indication does not disappear, consult an Authorized Mazda Dealer
CHECK CD	CD is inserted upside down	Insert the CD properly. If the error indication does not disappear, consult an Authorized Mazda Dealer
CHECK CD	CD is defective	Check the CD for scratches or soiling

Audio Control Switch Operation*

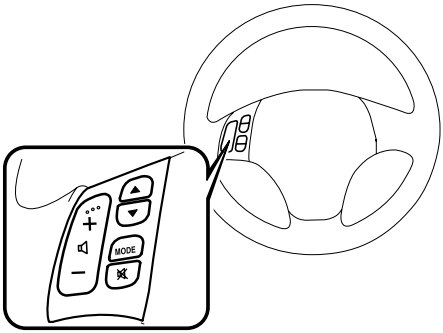

NOTE

Mazda installed this system to help you avoid being too distracted using audio controls on the dashboard. Always make safe driving your first priority.

▼Adjusting the Volume

To increase the volume, press volume button (+).

To decrease the volume, press volume button (−).

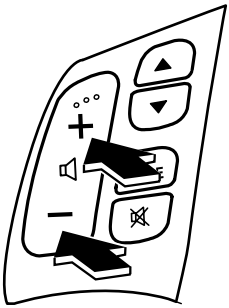

▼Changing the Source

Press the mode switch (MODE) to change the audio source (FM1 radio>FM2 radio>AM radio>CD player or CD changer>Cassette tape player or MD player>cyclical).

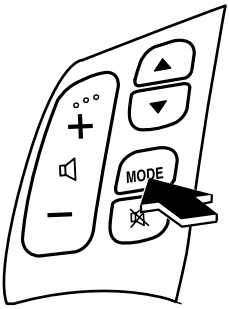

 *Some models.

NOTE

Cassette tape, MD, CD and CD changer modes cannot be selected in the following cases:

- A cassette deck, MD, CD, or CD changer are not equipped on the audio system.
- A cassette tape, MD or CD have not been inserted.

▼Seek Switch

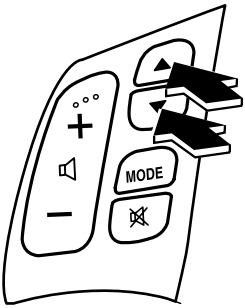

When listening to the radio

Press the seek switch (▲, ▼) to recall previously stored radio stations.
Press the seek switch (▲, ▼), the radio switches to the next/previous stored station in the order that it was stored (1~6).

Press the seek switch (▲, ▼) for about 2 seconds until a beep is heard to seek a higher or lower frequency automatically.

When playing a cassette tape

Press the seek switch (▲), release, and it will advance to the next selection.
Press the seek switch (▼), release, and it will repeat the selection being played.

When playing a CD or MD

Press the seek switch (▲) to skip to the next track.
Press the seek switch (▼) to repeat the current track.

▼Mute Switch

Press the mute switch ( ) once to mute audio, press it again to resume audio output.

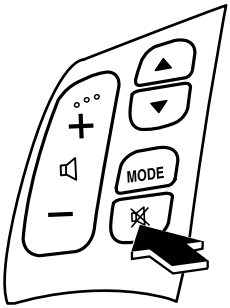

Safety Certification

This CD player is made and tested to meet exacting safety standards. It meets FCC requirements and complies with safety performance standards of the U.S. Department of Health and Human Services.

⚠CAUTION

- This CD player should not be adjusted or repaired by anyone except qualified service personnel.
  If servicing is required, contact an Authorized Mazda Dealer.
- Use of controls or adjustments or performance of procedures other than those specified herein may result in hazardous laser exposure. Never operate the CD player with the top case of the unit removed.
- Changes or modifications not expressly approved by the party responsible for compliance could void the user's authority to operate this equipment.

NOTE

For CD player section:
This device complies with part 15 of the FCC Rules. Operation is subject to the following two conditions: (1)This device may not cause harmful interference, and (2) this device must accept any interference received, including interference that may cause undesired operation.

NOTE

This equipment has been tested and found to comply with the limits for a Class B digital device, pursuant to part 15 of the FCC Rules. These limits are designed to provide reasonable protection against harmful interference in a residential installation. This equipment generates, uses, and can radiate radio frequency energy and, if not installed and used in accordance with the instructions, may cause harmful interference to radio communications. However, there is no guarantee that interference will not occur in a particular installation.

Sunvisors

When you need a sunvisor, lower it for use in front or swing it to the side.

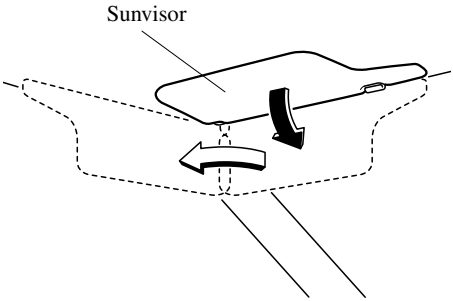

▼Side Extention Sunvisors

The visor extender extends the sunvisor's range of sun shading.
To use, pull it out.

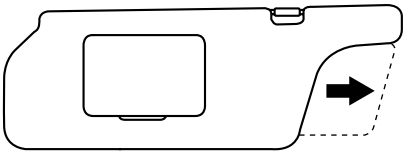

⚠CAUTION

When moving the sunvisor, reinsert the visor extender, otherwise the visor extender could hit the rearview mirror.

▼Vanity Mirrors

To use the vanity mirror, lower the sunvisor.
If your vehicle is equipped with a vanity mirror light, it will illuminate when you open the cover.

Interior Lights

▼Illuminated Entry System*

When the illuminated entry system operates, the overhead light (switch is in the DOOR position), the luggage compartment light (switch is in the ON position) and the courtesy lights turn on for:

- About 30 seconds after the driver's door is unlocked and the ignition key is removed.
- About 15 seconds after all doors are closed.
- About 15 seconds after the key is removed from the ignition with all doors closed.

The light also turns off when:

- The ignition switch is turned to the ON position and all doors are closed.
- The driver's door is locked.

NOTE
If any door is left opened, the light goes out after about 5 minutes. The light turns on again when the ignition switch is turned to the ON position, or when any door is opened after all doors have been closed.

▼Overhead Lights

Front

Without moonroof (with overhead console)

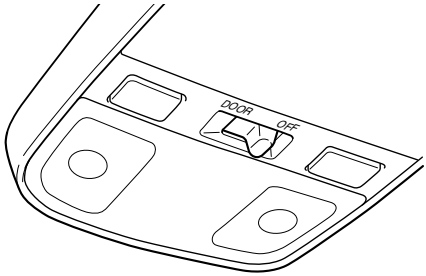

Without moonroof (without overhead console)

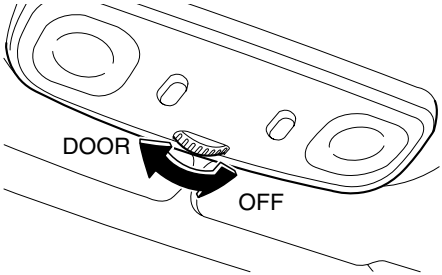

With moonroof

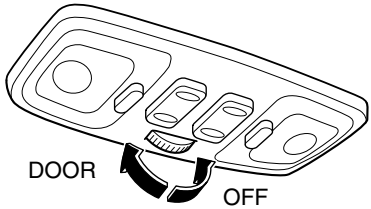

 *Some models.

OFF	Light off
DOOR	• Light on when any door or the liftgate is open • **(With illuminated entry system)** Light on or off when the illuminated entry system is on

Rear

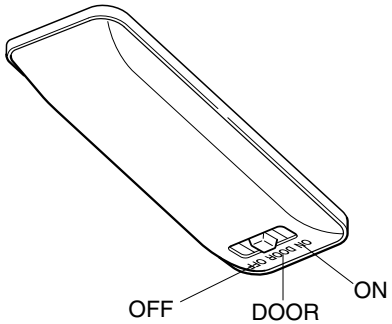

OFF	Light off
DOOR	• Light on when any door or the liftgate is open • **(With illuminated entry system)** Light on or off when the illuminated entry system is on
ON	Light on

▼Map Lights

The map lights are switched on or off by pressing the switches.

Without moonroof (with overhead console)

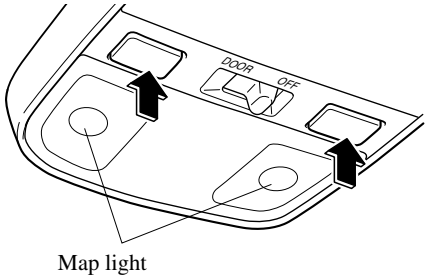

Without moonroof (without overhead console)

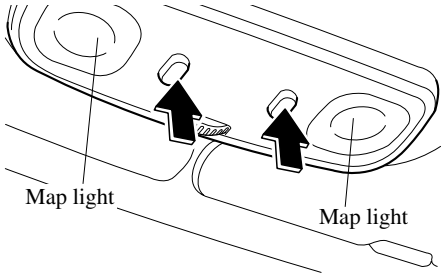

With moonroof

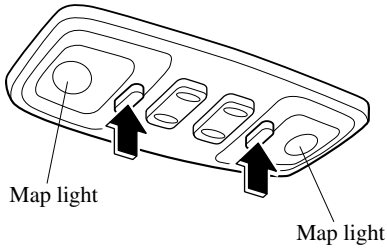

▼Luggage Compartment Light

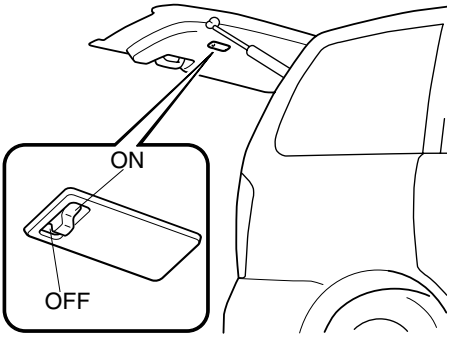

OFF	Light off
ON	• Light on when any door or the liftgate is open • **(With illuminated entry system)** Light on or off when the illuminated entry system is on

▼Courtesy Lights

Turns on when any door is open or the illuminated entry system is on.

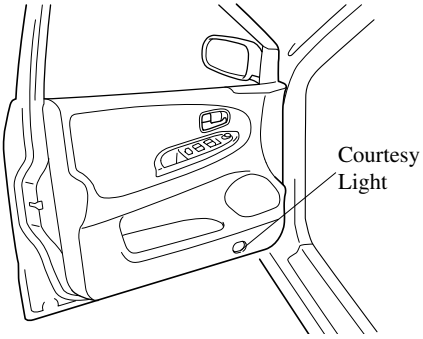

Lighter*

The ignition switch must be in the ACC or ON position.
Press the lighter in and release it. When ready for use, it automatically pops out.

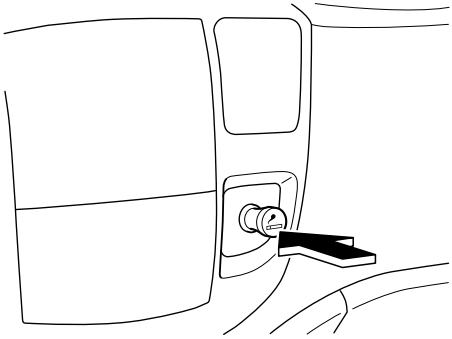

⚠CAUTION

- Don’t touch the metal part of the lighter, you may burn yourself.
- Don’t hold the lighter in because it will overheat.
- Don’t use the lighter socket for plug-in accessories such as shavers and coffee pots. They may damage it or cause electrical failure. Use only a genuine Mazda lighter or the equivalent.
- If the lighter doesn’t pop out within 30 seconds, remove it to prevent overheating.

 *Some models.

Ashtray*

⚠CAUTION

Don't use the ashtray for trash. You might start a fire.

▼Front

To open, pull the tray out and open the cover.

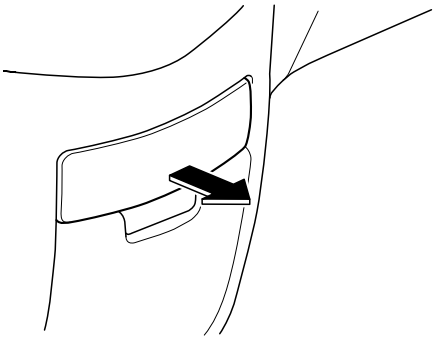

To remove, open and pull up the ashtray.

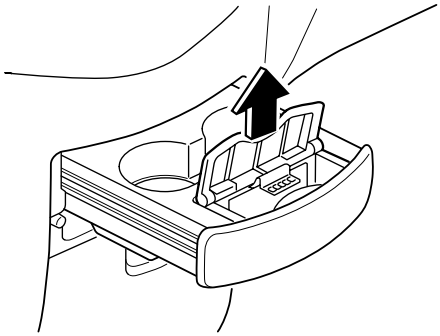

▼Rear

⚠*WARNING*

Using Ashtray Removed from its Fixed Position:
Using an ashtray removed from its fixed position or not completely inserted is dangerous. Cigarettes could roll around or spill out of the ashtray into the vehicle and start a fire. Moreover, cigarette stubs will not extinguish themselves completely even if the ashtray lid is closed. Only use a rear ashtray in its fixed position, and make sure it is completely inserted.

Type A

To remove, open the cover and pull the ashtray upward.

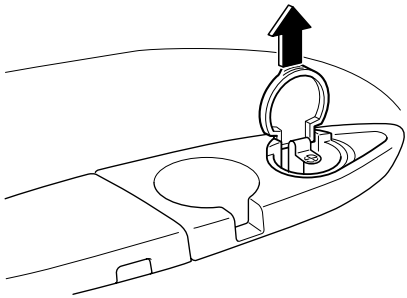

*Some models.

Type B

To remove, open and push down on the lock spring.

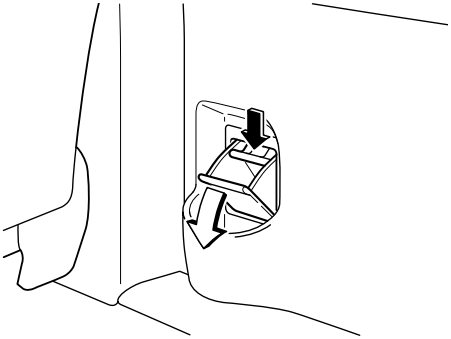

Cup Holder

⚠ *WARNING*

Using Cup Holder:
Using a cup holder to hold hot liquids while the vehicle is moving is dangerous. If the contents spill, you could be scalded. Never use a cup holder to hold hot liquids while the vehicle is moving.

Don't Put Anything Other Than Cups or Drink cans in Cup Holder:
Putting objects other than cups or drink cans in a cup holder is dangerous.
During sudden braking or maneuvering, occupants could be hit and injured, or objects could be thrown around the vehicle, causing interference with the driver and the possibility of an accident. Only use a cup holder for cups or drink cans.

Using Cup Holder as Ashtray:
Using a cup holder as an ashtray is dangerous because it could cause a fire or damage the cup holder.
Be sure the removable ashtray is in place before smoking and never use the cup holder as an ashtray.

⚠ CAUTION

To reduce the possibility of injury in an accident or a sudden stop, keep cup holders closed when not in use.

NOTE
Replacement ashtrays are available from an Authorized Mazda Dealer if they are missing.

▼Front

To use, pull the tray out.

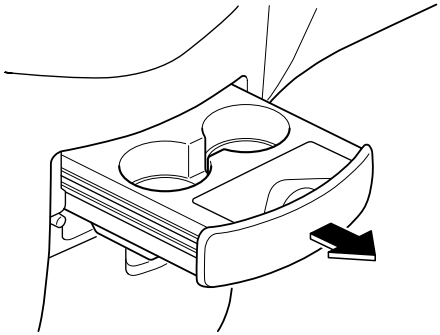

▼Rear

Second seat (Passenger seat only)

The cup holder is located on the outboard side of the right second-row seats. To use the cup holder, pull it out.

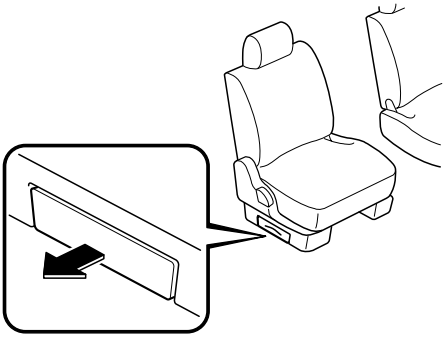

Seat side table

To use the cup holder

1. Raise the table (page 2-6)(page 2-11).
2. Pull the cup holder end to extend it rearwards.

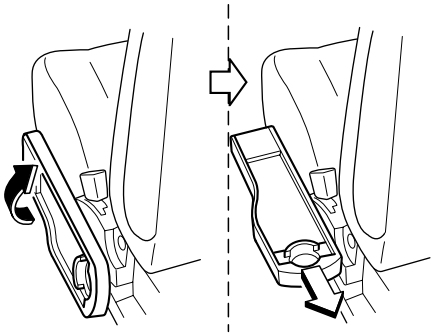

To collapse the table

1. Push the cup holder back into the table.
2. Pull the lever under the table, then lower it (page 2-6)(page 2-11). After the table is collapsed, press the table surface to lock it in place.

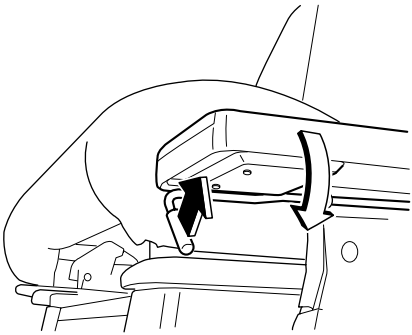

Third seat

If an ashtray is equipped, pull it out and use the hole for an additional cup holder.

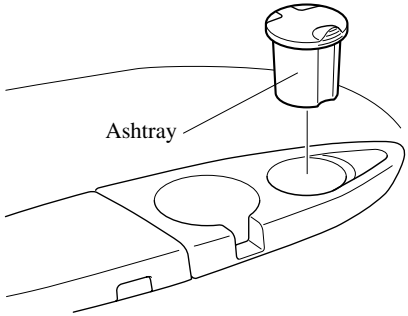

Bottle Holder

Bottle holders are on the inside of the sliding doors.

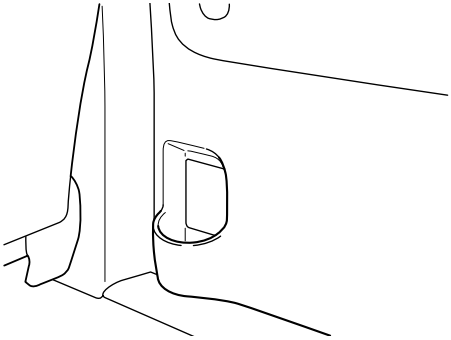

⚠ CAUTION

Don’t use the bottle holders for containers without caps. The contents may spill when the door is opened.

Storage Compartments

⚠ *WARNING*

Open Storage Boxes:
Driving with the storage boxes open is dangerous. To reduce the possibility of injury in an accident or a sudden stop, keep the storage boxes closed when driving.

⚠ CAUTION

Don't leave eyeglasses or lighters in the storage boxes while parked under the sun. A lighter could explode or the plastic material in eyeglasses could deform and crack from high temperature.

▼ Overhead Console*

This console box is designed to store a garage door opener or other accessories. Push and release to open.

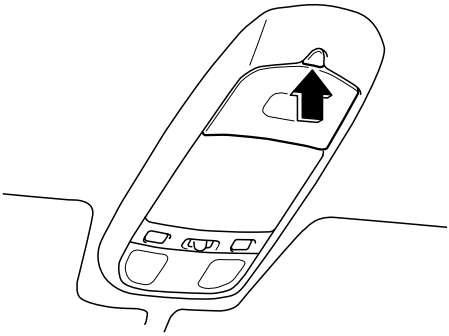

To store the garage door opener:

1. Open the console box.
2. Take out the urethane spacer.
3. Open the cap by pushing it from inside the box.

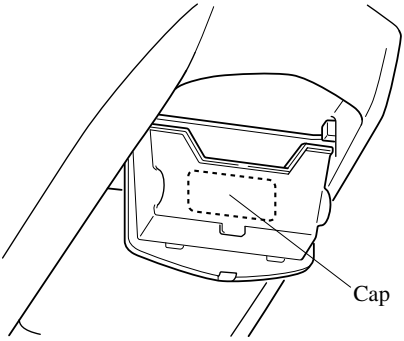

4. Store the garage door opener by adjusting the thickness with the urethane spacers.

▼ Eyeglass Holder*

Push the lid to open.

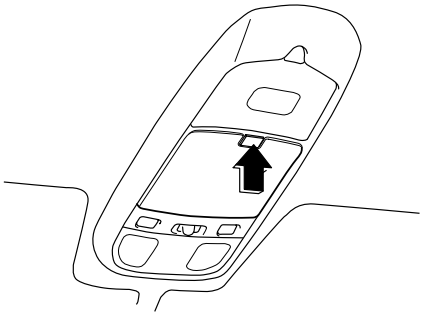

Interior Equipment

▼Glove Box

To open the glove box, pull the latch toward you.
Insert the key and turn it clockwise to lock, counterclockwise to unlock.

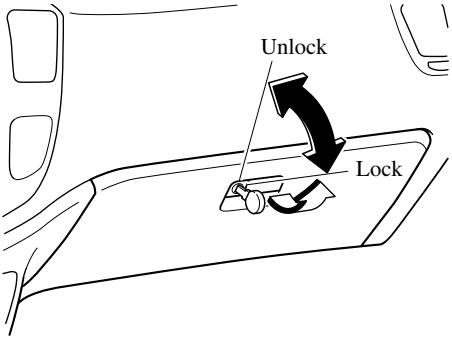

▼Front Console

Pull the latch to open.

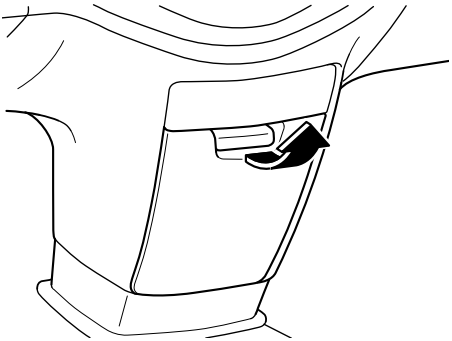

▼Under Seat Tray (Front Passenger Seat Only)

Lift the latch and pull the tray forward.

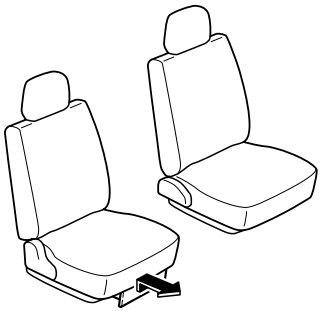

▼Storage Box (In Seat Side Table)

To use the storage box

1. Raise the table (page 2-6)(page 2-11).
2. Push the button to open.

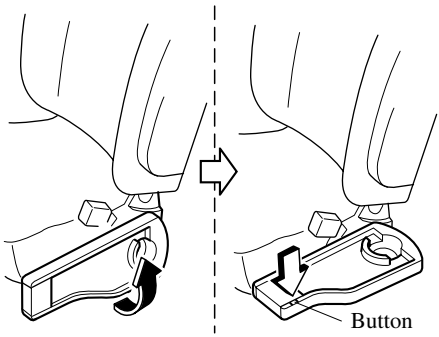

To collapse the table

1. Close the lid on the storage box.
2. Pull the lever under the table, then lower it (page 2-6)(page 2-11). After the table is collapsed, press the table surface to lock it in place.

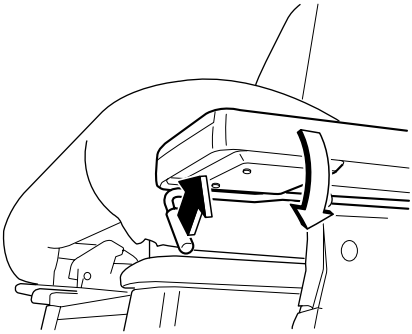

▼Rear Console*

Push the knob and open the cover.

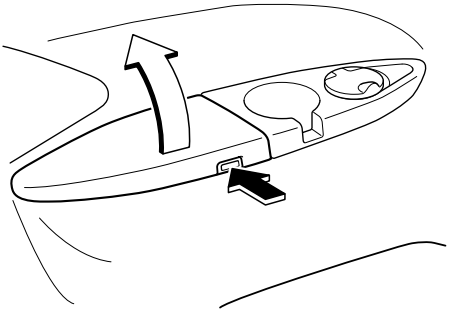

▼Cargo Securing Loops

⚠ *WARNING*

Not Securing Luggage and Cargo:
Not securing cargo while driving is dangerous as they could move or be crushed in sudden braking or a collision and cause injury. Make sure luggage and cargo is secured before driving.

Use the loops in the luggage compartment to secure cargo with a rope or net. The tensile strength of the loops is 196N (20 kgf, 44 lbf). Do not apply excessive force to the loops as it will damage them.

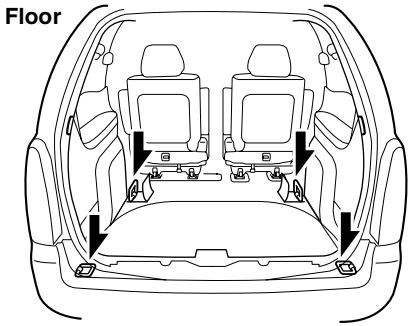

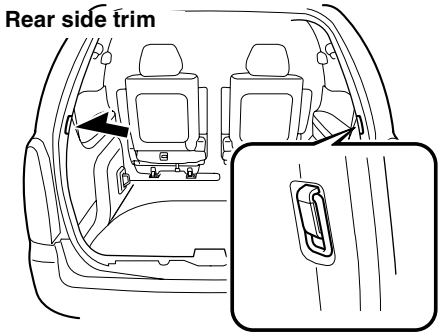

*Some models.

▼Shopping Bag Hooks

The shopping bag hooks can be used for hanging shopping bags.

⚠CAUTION

Do not hang excessive weight on the shopping bag hooks as they could be damaged.

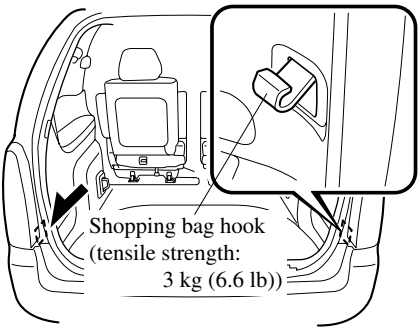

Accessory Sockets*

The ignition switch must be in the ACC or ON position.
Only use genuine Mazda accessories or the equivalent requiring no greater than 120 W (DC12 V, 10 A).

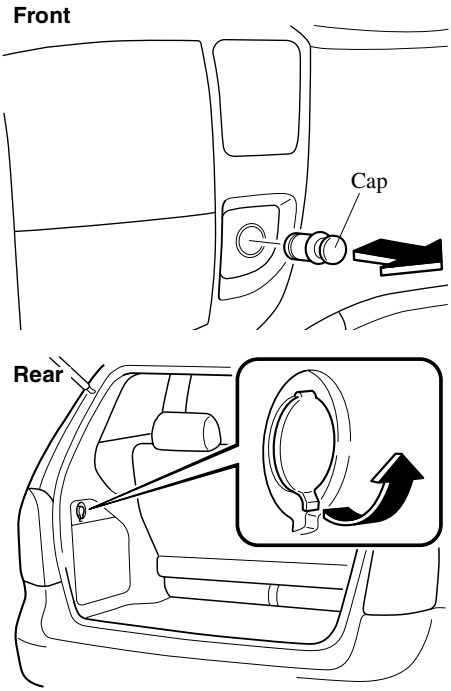

*Some models.

⚠CAUTION

To prevent accessory socket damage or electrical failure, pay attention to the following:

- Don't use accessories that require more than 120 W (DC12 V, 10 A).
- Don't use accessories that are not genuine Mazda accessories or the equivalent.
- Close the cover when the accessory socket is not in use.
- Correctly insert the plug into the accessory socket.

NOTE

To prevent discharging the battery, don't use the socket for long periods with the engine off or idling.

7 In Case of an Emergency

Helpful information on what to do in an emergency.

Parking in an Emergency 7-2
Parking in an Emergency 7-2

Flat Tire 7-3
Spare Tire and Tool Storage 7-3
Changing a Flat Tire 7-8

Overheating 7-15
Overheating 7-15

Emergency Starting 7-17
Starting a Flooded Engine 7-17
Jump-Starting 7-18
Push-Starting 7-21

Emergency Towing 7-22
Towing Description 7-22
Tiedown Hooks 7-23
Recreational Towing 7-23

Parking in an Emergency

The hazard warning lights should always be used when you stop on or near a roadway.

The hazard warning lights warn other drivers that your vehicle is a traffic hazard and that they must take extreme caution when near it.

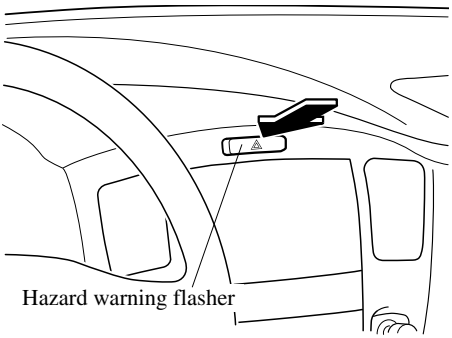

Depress the hazard warning flasher and all four turn signals will flash at once.

NOTE

- The turn signals don't work when the hazard warning lights are on.
- Check local regulations about the use of hazard warning lights while the vehicle is being towed. They may forbid it.

Spare Tire and Tool Storage

Spare tire and tools are stored in the locations illustrated in the diagram.

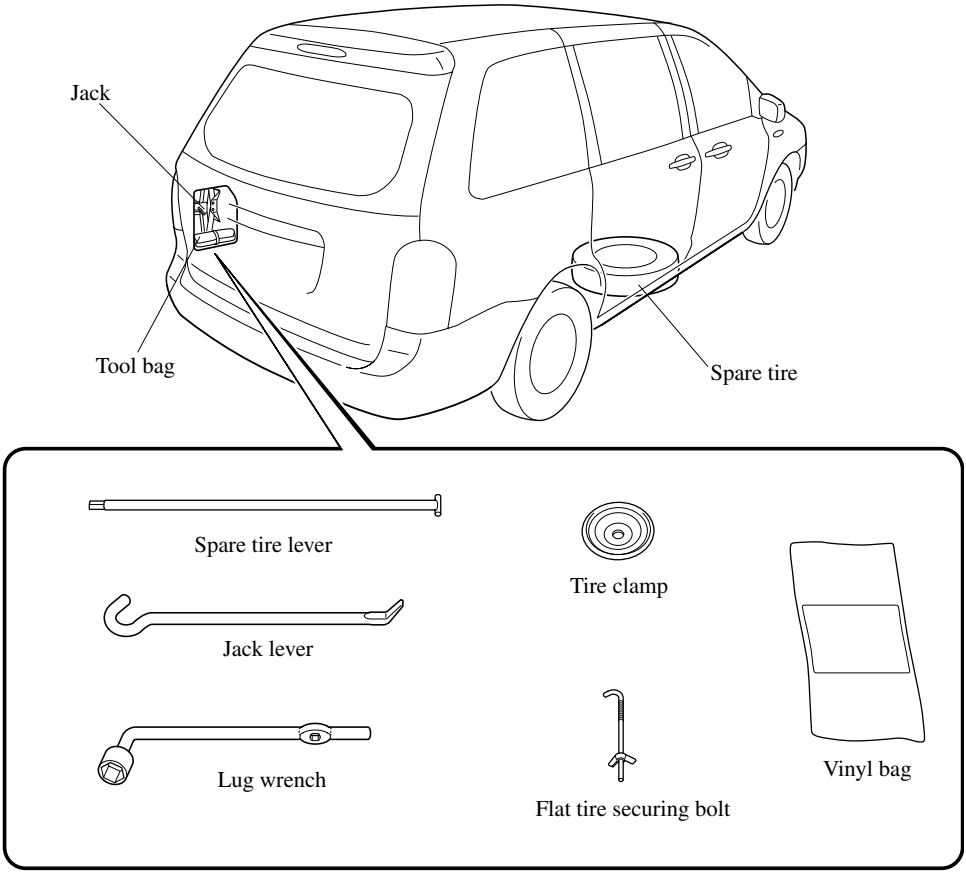

▼Jack

To remove the jack

1. Remove the cover.

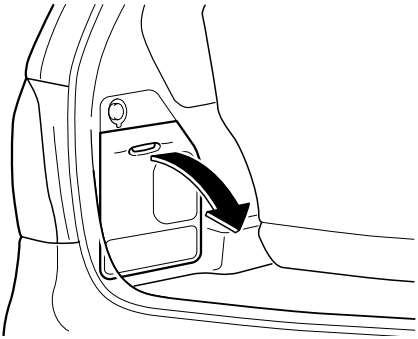

2. Remove the tool bag.

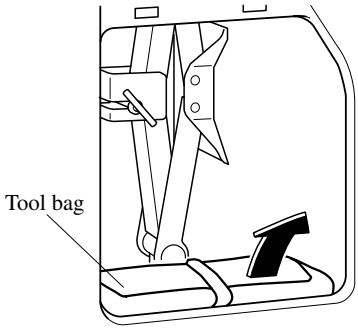

3. Turn the wing bolt counterclockwise.

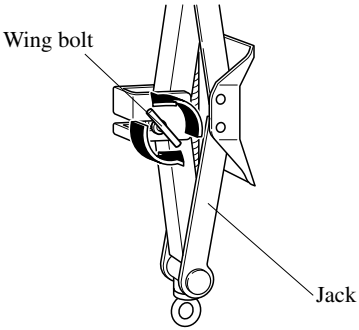

To secure the jack

Perform the removal procedure in reverse.

▼Spare Tire

Your Mazda has a temporary spare tire. The temporary spare tire is lighter and smaller than a conventional tire, and is designed only for emergency use and should be used only for VERY short periods. Temporary spares should NEVER be used for long drives or extended periods.

⚠ *WARNING*

Driving with a Temporary Spare Tire on Ice or Snow:
Driving with a spare tire on the front (driving) wheels on ice or snow is dangerous. Handling will be affected. You could lose control of the vehicle and have an accident. Put the spare tire on the rear axle and move a regular tire to the front.

⚠ CAUTION

To avoid damage to the temporary spare or to the vehicle, observe the following precautions:

- Don't exceed 80 km/h (50 mph).
- Avoid driving over obstacles. Also, don't drive through an automatic car wash. This tire's diameter is smaller than a conventional tire's, so the ground clearance is reduced about 25 mm (1 in).
- Don't use a tire chain on this tire because it won't fit properly.
- Don't use your temporary spare on any other vehicle; it has been designed only for your Mazda.
- Do not tow a trailer while using this tire.
- Use only one temporary spare tire on your vehicle at the same time.

To remove the spare tire

1. Have everyone get out of the vehicle and away from the vehicle and traffic.
2. For side-spoiler equipped vehicles, remove the fasteners on both sides of the spoiler cap by turning them counterclockwise.
   Pull the spoiler cap out.

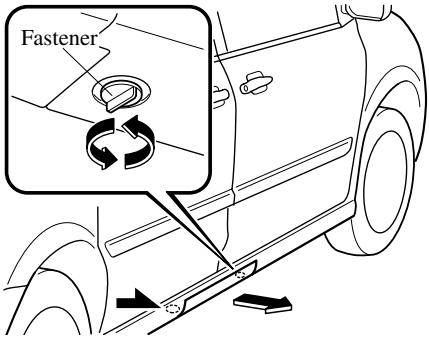

NOTE

After installing the side spoiler cap, make sure it is securely attached.

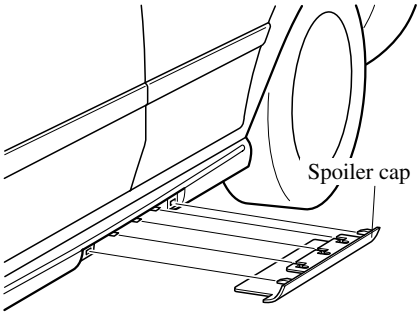

3. Locate the spare tire carrier socket cap on the right, in front of the second-row seat. Unscrew it by turning it counterclockwise.

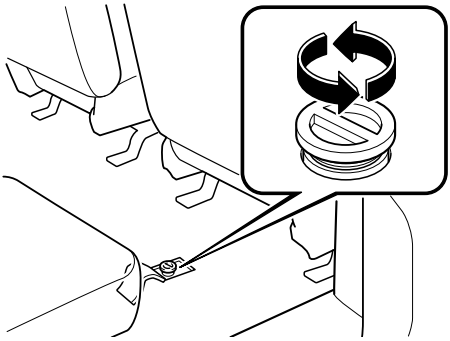

4. Remove the spare tire lever and lug wrench from the tool bag.
5. Raise the reclining lever and push the front seatback forward and out of the way.
   Make sure the seatback is locked.
6. Insert the spare tire lever into the spare tire carrier socket. Fit the lug wrench to the opposite end of the spare tire lever.

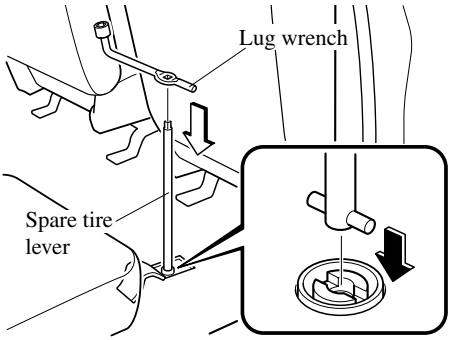

7. Slowly turn the lug wrench counterclockwise until the spare tire reaches the ground and the cable becomes loose.

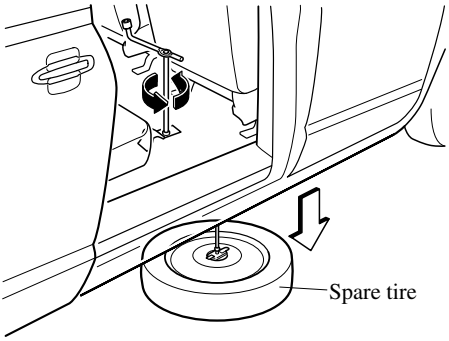

⚠ CAUTION

- Do not loosen the cable too much as this may cause damage to the spare tire carrier.
- Turning the lug wrench with the seat reclined could damage the seatback material.
- Applying excessive lateral force while the spare tire lever is attached may result in damage to the socket.

NOTE

The spare tire lever remains locked in the socket while the spare tire is being lowered.
Unless the cable is rolled up completely, the spare tire lever cannot be removed from the socket.

8. Rotate the small lever on top of the retaining plate and pull the retaining plate out from the center hole of the tire.

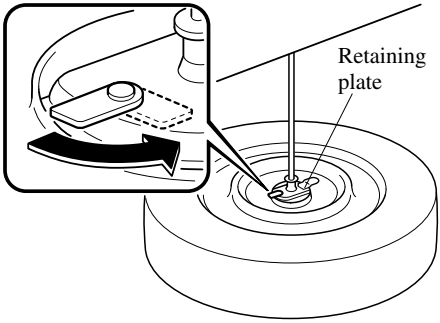

NOTE

A flat tire which has been removed from the vehicle for repair cannot be carried in the spare tire carrier. Secure the flat tire with the tire clamp and wing nut in the luggage compartment (page 7-12).

To secure the spare tire

1. Place the tire with the outer side facing upward, rotate the small lever on top of the retaining plate and slide the retaining plate through the center hole of the tire.
   Rotate the small lever into place.

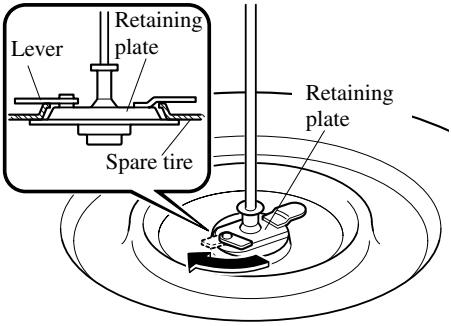

2. Raise the spare tire slowly in reverse order of removal.

⚠ WARNING

Carrier Placement for the Specialized Temporary Spare Tire:
Placing the specialized temporary spare tire in the spare tire carrier wrong side up or using any tire other than the small temporary spare tire designed for use with this vehicle is dangerous. It will result in poor attachment and insufficient ground clearance in the spare tire carrier and the danger of the tire falling off. This could result in someone being badly injured or even killed.
Place the specialized temporary spare tire in the spare tire carrier correctly.

⚠ CAUTION

Applying excessive lateral force while the spare tire lever is attached may result in damage to the socket.

NOTE

Unless the cable is rolled up completely, the spare tire lever cannot be removed from the socket.

3. Replace the spare tire carrier cap in the socket and turn it until the spare tire is pulled up tight.

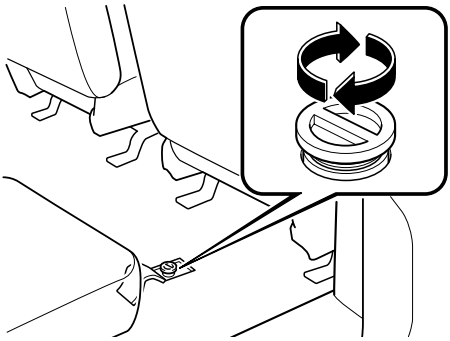

⚠ WARNING

Loose Spare Tire Carrier Socket:
A loose spare tire carrier socket cap is dangerous. The cable could be cut causing the spare tire to fall off. This could result in someone being badly injured or even killed.
Always screw the spare tire carrier socket cap completely tight and make sure the spare tire is locked in the highest position.

⚠ CAUTION

If you hear rattling from the spare tire carrier while the vehicle is moving, the spare tire carrier cable may be cut. Have it repaired at an Authorized Mazda Dealer as soon as possible.

Changing a Flat Tire

NOTE

If the following occurs while driving, it could indicate a flat tire.

- Steering becomes difficult.
- The vehicle begins to vibrate excessively.
- The vehicle pulls in one direction.

If you have a flat tire, drive slowly to a level spot that is well off the road and out of the way of traffic to change the tire. Stopping in traffic or on the shoulder of a busy road is dangerous.

⚠ WARNING

Jacking a Vehicle:
Changing a tire is dangerous if not done properly. The vehicle can slip off the jack and seriously injure someone.
Be sure to follow the directions for changing a tire, and never get under a vehicle that is supported only by a jack.

Passenger in Vehicle Supported by a Jack:
Allowing someone to remain in a vehicle supported by a jack is dangerous. The occupant could cause the vehicle to fall resulting in serious injury. Never allow anyone inside a vehicle supported by a jack.

NOTE

Make sure the jack is well lubricated before using it.

1. Park on a level surface off the right-of-way and firmly set the parking brake.
2. Shift into Park (P) and turn off the engine.
3. Turn on the hazard warning flasher.
4. Have everyone get out of the vehicle and away from the vehicle and traffic.
5. Remove the jack, tool, and spare tire (page 7-3).
6. Block the wheel diagonally opposite the flat tire. When blocking a wheel, place a block both in front and behind the tire.

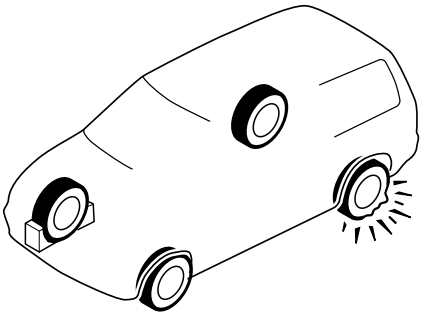

NOTE

When blocking a tire, use rocks or wood blocks of sufficient size to hold the tire in place.

⚠ CAUTION

If the jack leans towards the front or the rear when jacking up, lower the vehicle until the wheels are firmly on the ground. Then confirm that the parking brake is set, the shift lever is in Park (P), then push the blocks firmly under the blocked tire.

▼ Removing a Flat Tire

1. Pry off the wheel cover with the beveled end of the jack lever.

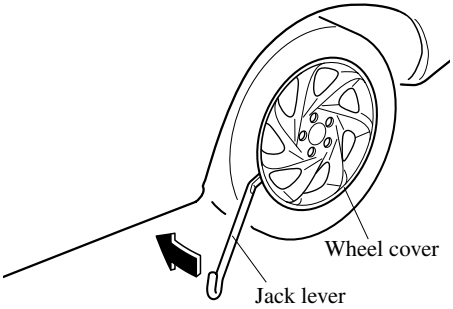

NOTE

Force the end of the jack lever firmly between wheel and cover, or removal will be difficult.

⚠ CAUTION

Align the notch on the wheel cover with the valve stem when installing it.

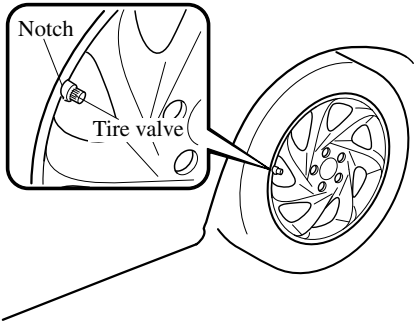

Damage could occur during installation if the wheel cover is not properly aligned.

2. Loosen the lug nuts by turning them counterclockwise one turn each, but don't remove any until the tire has been raised off the ground.

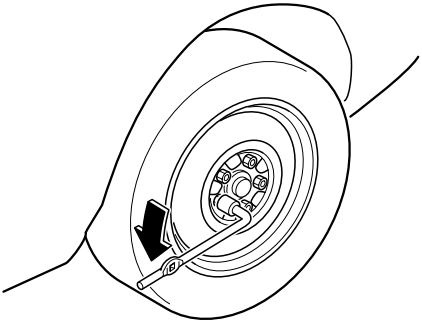

3. Place the jack under the jacking position closest to the tire being changed.

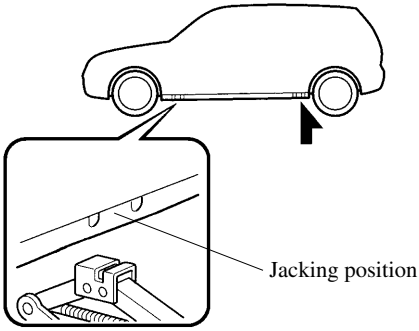

⚠ *WARNING*

Incorrect Jacking Position:
Attempting to jack the vehicle in positions other than those recommended in this manual is dangerous. The vehicle could slip off the jack and seriously injure or even kill someone. Use only the front and rear jacking positions recommended in this manual.

Improper Jack:
Using a jack that isn't designed for your Mazda is dangerous. The vehicle could slip off the jack and seriously injure someone. Use only the jack provided with your Mazda.

Placing Objects Under the Jack:
Jacking the vehicle with an object under the jack is dangerous. The jack could slip and someone could be seriously injured by the jack or the falling vehicle. Never place objects under the jack.

4. Insert the jack lever and attach the lug wrench to tire jack.

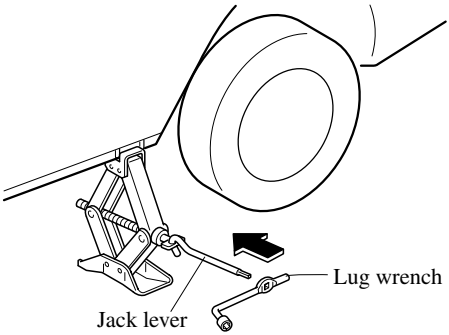

5. Turn the lug wrench clockwise and raise the vehicle high enough so that the spare tire can be installed. Before removing the lug nuts, make sure your Mazda is firmly in position and that it cannot slip or move.

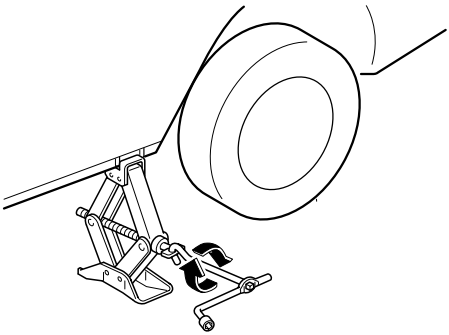

6. Remove the lug nuts by turning them counterclockwise; then remove the wheel.

▼ Locking Lug Nuts*

If your vehicle has optional antitheft wheel lug nuts, one on each wheel will lock the tires and you must use a special key to unlock them. This key is attached to the lug wrench and is stored with the spare tire. Register them with the lock manufacturer by filling out the card provided in the glove box and mailing it in the accompanying envelope. If you lose your key, consult an Authorized Mazda Dealer or use the lock manufacturer's order form, which is with the registration card.

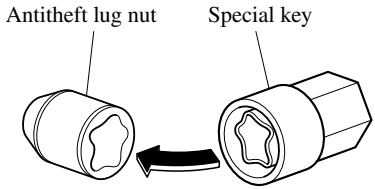

To remove an antitheft lug nut

1. Get the key for the locking lug nut.
2. Place it on top of the nut, and be sure to hold the key square to it. If you hold the key at an angle, you may damage both key and nut. Don't use a power impact wrench.
3. Place the lug wrench on top of the key and apply pressure. Turn the wrench counterclockwise.

*Some models.

To replace the nut

1. Place the key on top of the nut.
2. Place the lug wrench on top of the key, apply pressure, and turn it clockwise.

▼Mounting the Spare Tire

1. Remove dirt and grime from the mounting surfaces of the wheel and hub, including the hub bolts, with a cloth.

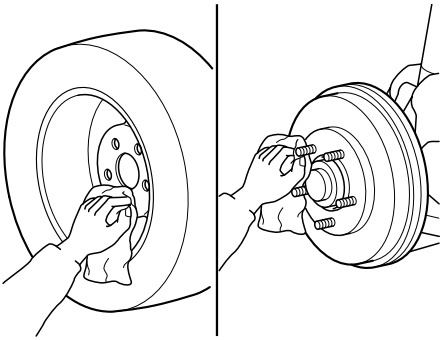

⚠WARNING

Removing Dirt and Grime from Wheels, Hubs and Hub Bolts:
When changing or replacing a tire, not removing dirt and grime from the mounting surfaces of the wheel, hub and hub bolts is dangerous. The lug nuts could loosen while driving and cause the tire to come off, resulting in an accident. Make sure the mounting surfaces of the wheel, hub and lug nuts are clean before changing or replacing tires.

2. Mount the spare tire.
3. Install the lug nuts with the beveled edge inward; tighten them by hand.

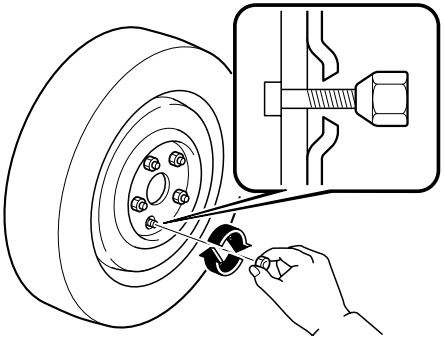

⚠WARNING

Don't Apply Oil or Grease to Lug Nuts, Bolts:
Applying oil or grease to lug nuts and bolts is dangerous. The lug nuts could loosen while driving and cause the tire to come off, resulting in an accident. In addition, lug nuts and bolts could be damaged if tightened more than necessary. Do not apply oil or grease to lug nuts and bolts and do not tighten the lug nuts beyond the recommended tightening torque.

4. Turn the lug wrench counterclockwise and lower the vehicle. Use the lug wrench to tighten the nuts in the order shown.

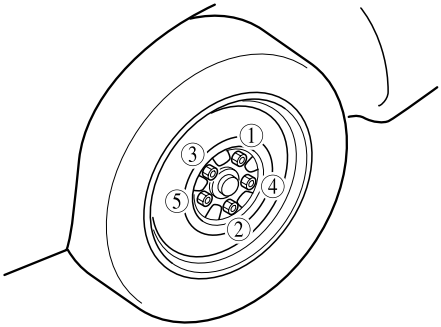

If you're unsure of how tight the nuts should be, have them inspected at an Authorized Mazda Dealer.

Nut tightening torque:

N·m (kgf·m, ft·lbf)	108—147 (11—15, 80—108)

⚠ *WARNING*

Loose Lug Nuts:
Improperly or loosely tightened lug nuts are dangerous. The wheel could wobble or come off. This could result in loss of vehicle control and cause a serious accident. Always securely and correctly tighten the lug nuts.

Metric Studs and Lug Nuts:
Because the wheel studs and lug nuts on your Mazda have metric threads, using a non-metric nut is dangerous. On a metric stud, it would not secure the wheel and would damage the stud, which could cause the wheel to slip off and cause an accident. Be sure to reinstall the same nuts you removed or replace them with metric nuts of the same configuration.

Incorrect Tire Air Pressure:
Driving on tires with incorrect air pressure is dangerous. Tires with incorrect pressure could affect handling and result in an accident. Don't drive with any tires that have incorrect air pressure. When you check the regular tires' air pressure, check the spare tire, too.

5. Put the flat tire in the special vinyl bag and tie it at the top.

6. With the tire facing outward, punch a hole through the vinyl bag and the center hole, using the flat tire securing bolt.

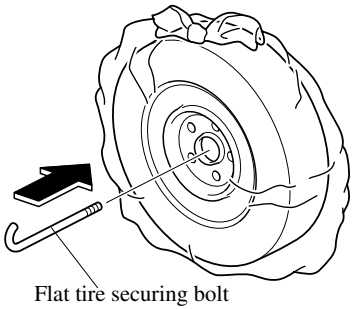

7. Lift the anchor clip on the back of third-row seat.

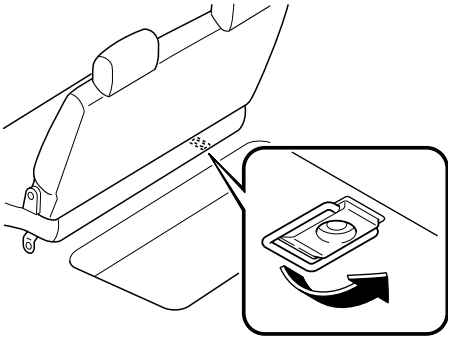

8. Install the flat tire with the tire securing bolt hooked in the anchor clip as shown below.

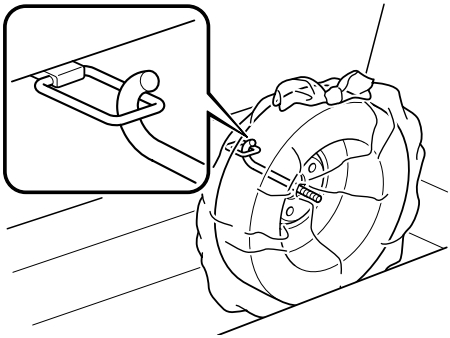

9. Secure the flat tire with the tire clamp and wing nut as shown below.
Have the damaged tire repaired or replaced as soon as possible.

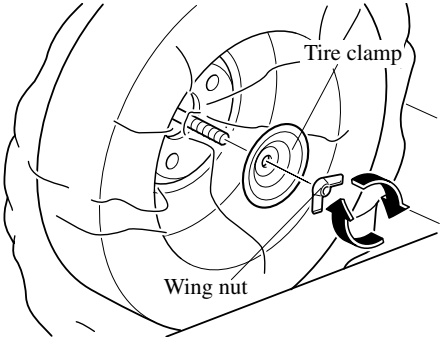

NOTE

- If the tire rattles even through the wing nut is tightened, reverse the tire clamp and retighten the wing nut.
- To prevent the jack and tool from rattling, store them properly.

Overheating

If the temperature gauge indicates overheating, the vehicle loses power, or you hear a loud knocking or pinging noise, the engine is probably too hot.

⚠ WARNING

Cooling Fan and Engine Inspection:
Inspecting the engine with the ignition switch in the ON position is dangerous. The cooling fan could turn on unexpectedly even when the engine isn't running. You could be seriously injured by the fan. Turn the ignition switch off and remove the key from the ignition switch when you inspect the engine.

Cooling System Cap:
When the engine and radiator are hot, scalding coolant and steam may shoot out under pressure and cause serious injury. Don't remove the cooling system cap when the engine and radiator are hot.

Steam from Overheated Engine:
Steam from an overheated engine is dangerous. The escaping steam could seriously burn you. Open the hood ONLY after steam is no longer escaping from the engine.

If the temperature gauge indicates overheating:

1. Drive safely to the side of the road and park off the right-of-way.
2. Shift into park (P).
   Apply the parking brake.
3. Turn off the air conditioner.
4. Check whether coolant or steam is escaping from under the hood or from the engine compartment.

   If steam is coming from the engine compartment:
   Don't go near the front of the vehicle.
   Stop the engine.
   Wait until the steam dissipates, then open the hood and start the engine.

   If neither coolant nor steam is escaping:
   Open the hood and idle the engine until it cools.

⚠ CAUTION

If the cooling fan does not operate while the engine is running, the engine temperature will increase. Stop the engine and call an Authorized Mazda Dealer.

5. Make sure the cooling fan is operating, then turn off the engine after the temperature has decreased.

6. When cool, check the coolant level. If it's low, look for coolant leaks from the radiator and hoses.

   If you find a leak or other damage, or if coolant is still leaking:
   Stop the engine and call an Authorized Mazda Dealer.

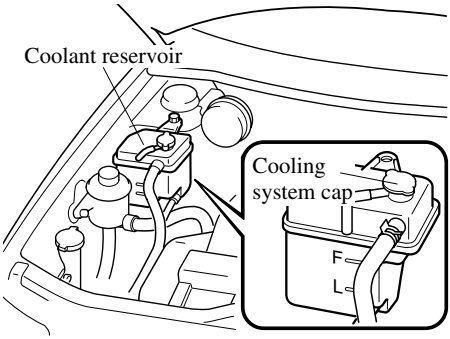

   If you find no problems, the engine is cool, and no leaks are obvious:

   Carefully add coolant as required (page 8-12).

⚠ CAUTION

If the engine continues to overheat or frequently overheats, have the cooling system inspected. The engine could be seriously damaged unless repairs are made. Consult an Authorized Mazda Dealer.

Starting a Flooded Engine

If the engine fails to start, it may be flooded (excessive fuel in the engine).

Follow this procedure:

1. Depress the accelerator all the way and hold it there.
2. Turn the ignition switch to the START position and hold it there—for up to 10 seconds. If the engine starts, release the key and accelerator immediately because the engine will suddenly rev up.
3. If the engine fails to start, crank it without using the accelerator—for up to 10 seconds.

Emergency Starting

Jump-Starting

Jump-starting is dangerous if done incorrectly. So follow the procedure carefully. If you feel unsure about jump-starting, we strongly recommend that you have a competent service technician do the work.

⚠ *WARNING*

Follow These Precautions Carefully

To ensure safe and correct handling of the battery, read the following precautions carefully before using the battery or inspecting it.

Eye Protection:

Working without eye protection is dangerous. Battery fluid contains SULFURIC ACID which could cause blindness if splashed into in your eyes. Also, hydrogen gas produced during normal battery operation, could ignite and cause the battery to explode. Always wear eye protection when working near the battery.

Spilled Battery Fluid:

Spilled battery fluid is dangerous.
Battery fluid contains SULFURIC ACID which could cause serious injuries if it gets in eyes, skin or clothing. If this happens, immediately flush your eyes with water for 15 minutes or wash your skin thoroughly and get medical attention. Wear eye protection and protective gloves to prevent contact with battery fluid.

Children and Batteries:

Allowing children to play near batteries is dangerous. Battery fluid could cause serious injuries if it gets in the eyes or on the skin. Always keep batteries out of the reach of children.

⚠ *WARNING*

Keep Flames Away:
Flames and sparks near open battery cells are dangerous. Hydrogen gas, produced during normal battery operation, could ignite and cause the battery to explode. An exploding battery can cause serious burns and injuries. Keep all flames including cigarettes and sparks away from open battery cells. When working near a battery, do not allow metal tools to contact the positive (+) or negative (−) terminal of the battery. Do not allow the positive (+) terminal to contact the vehicle body.

Battery-Related Explosion:
Flames and sparks near open battery cells are dangerous. Hydrogen gas, produced during normal battery operation, could ignite and cause the battery to explode. An exploding battery can cause serious burns and injuries. Keep all flames, including cigarettes, and sparks away from open battery cells.

Low Fluid Level or Frozen Battery:
Jump-starting a frozen battery or one with a low fluid level is dangerous. It may rupture or explode, causing serious injury.
Don't jump-start a frozen battery or one with a low fluid level.

Connecting to Negative Terminal:
Connecting the end of the second cable to the negative (−) terminal of the discharged battery is dangerous.
A spark could cause the gas around the battery to explode and injure someone. Connect the cable to a point away from the battery.

Connecting Jumper Cable to Moving Parts:
Connecting a jumper cable near or to moving parts (cooling fans, belts) is dangerous. The cable could get caught when the engine starts and cause serious injury. Never connect a jumper cable to or near any part that moves.

⚠ CAUTION

Use only a 12 V booster system. You can damage a 12 V starter, ignition system, and other electrical parts beyond repair with a 24 V power supply (two 12 V batteries in series or a 24 V motor generator set).

Emergency Starting

1. Make sure the booster battery is 12 V and that its negative terminal is grounded.
2. If the booster battery is in another vehicle, don't allow the vehicles to touch. Turn off the engine of the vehicle with the booster battery and all unnecessary electrical loads in both vehicles.
3. Connect the jumper cables in the exact sequence as in the illustration.
   - Connect one end of a cable to the positive terminal on the discharged battery (1).
   - Attach the other end to the positive terminal on the booster battery (2).
   - Connect one end of the other cable to the negative terminal of the booster battery (3).
   - Connect the other end to a solid, stationary, exposed metallic point (for example, the engine hanger) away from the discharged battery (4).

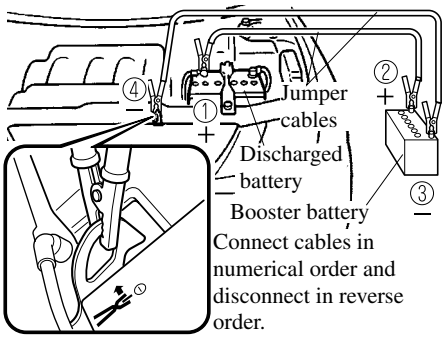

4. Start the engine of the booster vehicle and run it a few minutes. Then start the engine of the other vehicle.
5. When finished, carefully disconnect the cables in the reverse order described in Step 3.

Push-Starting

You can’t start a vehicle with an automatic transaxle by pushing it.

Emergency Towing

Towing Description

We recommend that towing be done only by an Authorized Mazda Dealer or a commercial tow-truck service.

Proper lifting and towing are necessary to prevent damage to the vehicle. Government and local laws must be followed.

A towed vehicle usually should have its front wheels off the ground. If excessive damage or other conditions prevent this, use wheel dollies.

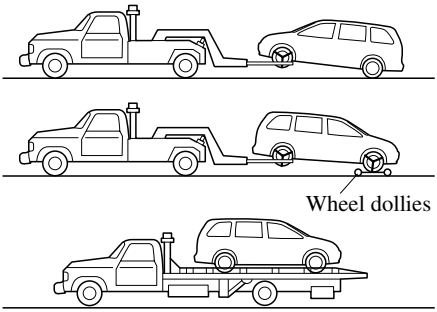

When towing with the rear wheels on the ground, release the parking brake.

⚠ CAUTION

Don't tow the vehicle pointed backward with driving wheels on the ground. This may cause internal damage to the transaxle.

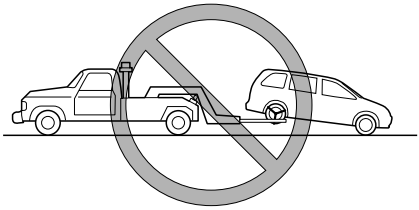

⚠ CAUTION

Don't tow with sling-type equipment. This could damage your vehicle. Use wheel-lift or flatbed equipment.

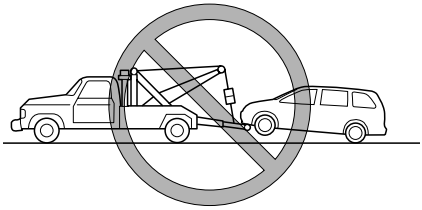

Tiedown Hooks

⚠ CAUTION

Don't use the tiedown hooks under the front and rear for towing.
They are designed ONLY for tying down the vehicle when it's being transported. Using them for towing will damage the bumper.

▼ Tiedown Hooks-Front

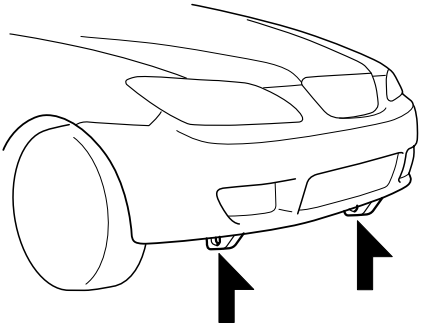

▼ Tiedown Hook-Rear

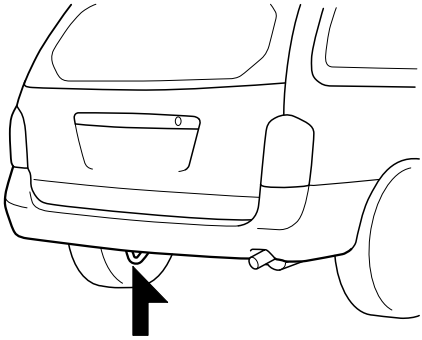

Recreational Towing

An example of " recreational towing " is towing your vehicle behind a motorhome. The transaxle is not designed for towing this vehicle on all 4 wheels.
When doing recreational towing refer to " Towing Description " (page 7-22) and " Tiedown Hooks " (page 7-23) and carefully follow the instructions.

8 Maintenance and Care

How to keep your Mazda in top condition.

Introduction 8-2
Introduction 8-2

Scheduled Maintenance 8-3
Scheduled Maintenance 8-3

Owner Maintenance 8-7
Owner Maintenance Schedule 8-7
Owner Maintenance Precautions 8-8
Engine Compartment Overview 8-9
Engine Oil 8-10
Engine Coolant 8-12
Brake Fluid 8-15
Power Steering Fluid 8-16
Automatic Transaxle Fluid (ATF) 8-16
Washer Fluid 8-18
Body Lubrication 8-19
Air Filter 8-19
Wiper Blades 8-20
Battery 8-24
Tires 8-27
Light Bulbs 8-31
Fuses 8-38

Appearance Care 8-43
How to Minimize Environmental Paint Damage 8-43
Exterior Care 8-45
Interior Care 8-48

Introduction

Be extremely careful and prevent injury to yourself and others or damage to your vehicle when using this manual for inspection and maintenance.

If you’re unsure about any procedure it describes, we strongly urge you to have a reliable and qualified service shop perform the work, preferably an Authorized Mazda Dealer.

Factory-trained Mazda technicians and genuine Mazda parts are best for your vehicle. Without this expertise and the parts that have been designed and made especially for your Mazda, inadequate, incomplete, and insufficient servicing may result in problems. This could lead to vehicle damage or an accident and injuries.

For expert advice and quality service, consult an Authorized Mazda Dealer.

The owner should retain evidence that proper maintenance has been performed as prescribed.

Claims against the warranty resulting from lack of maintenance, as opposed to defective materials or authorized Mazda workmanship, will not be honored.

Any auto repair shop using parts equivalent to your Mazda’s original equipment may perform maintenance. **But we recommend that it always be done by an Authorized Mazda Dealer using genuine Mazda parts.**

Scheduled Maintenance

Follow Schedule 1 if the vehicle is operated mainly where none of the following conditions apply.
If any do apply, follow Schedule 2 (Canada and Puerto Rico residents follow Schedule 2).

- Repeated short-distance driving
- Driving in dusty conditions
- Driving with extended use of brakes
- Driving in areas where salt or other corrosive materials are being used
- Driving on rough or muddy roads
- Extended periods of idling or low-speed operation
- Driving for long periods in cold temperatures or extremely humid climates
- Towing a trailer

NOTE
After the prescribed period, continue to follow the described maintenance at the recommended intervals.

Scheduled Maintenance

▼Schedule 1

I : Inspect and repair, clean, adjust, or replace if necessary.
R: Replace
L: Lubricate

Maintenance Interval (Number of months or kilometers (miles), whichever comes first)	Months	6	12	18	24	30	36	42	48
	×1000 km	12	24	36	48	60	72	84	96
	×1000 miles	7.5	15	22.5	30	37.5	45	52.5	60

ENGINE

Engine oil	R	R	R	R	R	R	R	R
Engine oil filter	R	R	R	R	R	R	R	R
Drive belts				I				I
PCV valve*1								I

IGNITION SYSTEM

Spark plugs (Platinum tipped type)	**Replace every 160,000 km (100,000 miles)**

FUEL SYSTEM

Air filter					R			
Fuel lines and hoses*1				I				I

COOLING SYSTEM

Cooling system				I				I
Engine coolant	**Replace at first 96,000 km (60,000 miles) or 48 months ; after that, every 24 months**							

CHASSIS and BODY

Brake lines, hoses and connections				I				I
Disc brakes		I		I		I		I
Drum brakes				I				I
Tire (Rotation)	**Rotate every 12,000km (7,500miles)**							
Steering operation and linkages				I				I
Front suspension ball joints				I				I
Driveshaft dust boots				I				I
Exhaust system and heat shields	**Inspect every 72,000km (45,000miles) or 60 months**							
All locks and hinges	L	L	L	L	L	L	L	L

AIR CONDITIONER SYSTEM (if equipped)

Cabin air filter (if equipped)	**Replace every 40,000 km (25,000 miles) or 24 months**

*1 According to state / provincial and federal regulations, failure to perform maintenance on these items will not void your emissions warranties. However, Mazda recommends that all maintenance services be performed at the recommended time or mileage / kilometer period to ensure long-term reliability.

▼Schedule 2

I : Inspect and repair, clean, adjust, or replace if necessary.
R: Replace

Maintenance Interval (Number of months or kilometers (miles), whichever comes first)	**Months**	**4**	**8**	**12**	**16**	**20**	**24**	**28**	**32**	**36**	**40**	**44**	**48**
	×1000 km	**8**	**16**	**24**	**32**	**40**	**48**	**56**	**64**	**72**	**80**	**88**	**96**
	×1000 miles	**5**	**10**	**15**	**20**	**25**	**30**	**35**	**40**	**45**	**50**	**55**	**60**

ENGINE

Engine oil	Puerto Rico	**Replace every 5,000 km (3,000 miles) or 3 months**											
	Others	**R**	**R**	**R**	**R**	**R**	**R**	**R**	**R**	**R**	**R**	**R**	**R**
Engine oil filter		**R**	**R**	**R**	**R**	**R**	**R**	**R**	**R**	**R**	**R**	**R**	**R**
Drive belts							**I**						**I**
PCV valve*1													**I**
Hoses and tubes for emission(Puerto Rico)													**I**

IGNITION SYSTEM

Spark plugs (Platinum tipped type)	USA	**Replace every 96,000 km (60,000 miles)**
	Others*2	**Replace every 160,000 km (100,000 miles)**

FUEL SYSTEM

Air filter	Puerto Rico						**R**						**R**
	Others							**R**					
Fuel lines and hoses*1							**I**						**I**

COOLING SYSTEM

Cooling system						**I**						**I**
Engine coolant	**Replace at first 96,000 km (60,000 miles) or 48 months ; after that, every 24 months**											
Engine coolant level	**I**	**I**	**I**	**I**	**I**	**I**	**I**	**I**	**I**	**I**	**I**	**I**

ELECTRICAL SYSTEM

Function of all lights	**I**	**I**	**I**	**I**	**I**	**I**	**I**	**I**	**I**	**I**	**I**	**I**

*1 According to state / provincial and federal regulations, failure to perform maintenance on these items will not void your emissions warranties. However, Mazda recommends that all maintenance services be performed at the recommended time or mileage / kilometer period to ensure long-term reliability.
*2 If the vehicle is operated under any of the following conditions, change the spark plugs every 96,000 km (60,000 miles) or shorter.
a)Repeated short-distance driving
b)Extended periods of idling or low-speed operation
c)Driving for long periods in cold temperatures or extremely humid climates
d)Towing a trailer

Scheduled Maintenance

I : Inspect and repair, clean, adjust, or replace if necessary.
L: Lubricate

Maintenance Interval (Number of months or kilometers (miles), whichever comes first)	**Months**	**4**	**8**	**12**	**16**	**20**	**24**	**28**	**32**	**36**	**40**	**44**	**48**
	×1000 km	**8**	**16**	**24**	**32**	**40**	**48**	**56**	**64**	**72**	**80**	**88**	**96**
	×1000 miles	**5**	**10**	**15**	**20**	**25**	**30**	**35**	**40**	**45**	**50**	**55**	**60**

CHASSIS and BODY

Brake lines, hoses and connections						**I**						**I**
Brake fluid level	**I**	**I**	**I**	**I**	**I**	**I**	**I**	**I**	**I**	**I**	**I**	**I**
Disc brakes			**I**			**I**			**I**			**I**
Drum brakes						**I**						**I**
Tire (rotation)	**Rotate every 8,000km (5,000miles)**											
Tire inflation pressure and tire wear	**I**	**I**	**I**	**I**	**I**	**I**	**I**	**I**	**I**	**I**	**I**	**I**
Steering operation and linkages						**I**						**I**
Power steering fluid level	**I**	**I**	**I**	**I**	**I**	**I**	**I**	**I**	**I**	**I**	**I**	**I**
Front suspension ball joints						**I**						**I**
Driveshaft dust boots						**I**						**I**
Exhaust system and heat shields	**Inspect every 72,000km (45,000miles) or 60 months**											
All locks and hinges	**L**	**L**	**L**	**L**	**L**	**L**	**L**	**L**	**L**	**L**	**L**	**L**
Washer fluid level	**I**	**I**	**I**	**I**	**I**	**I**	**I**	**I**	**I**	**I**	**I**	**I**

AIR CONDITIONER SYSTEM (if equipped)

Cabin air filter (if equipped)	**Replace every 40,000 km (25,000 miles) or 24 months**

Owner Maintenance Schedule

The owner or a qualified service technician should make these vehicle inspections at the indicated intervals to ensure safe and dependable operation.

Bring any problem to the attention of an Authorized Mazda Dealer or qualified service technician as soon as possible.

▼When Refueling

- Brake fluid level (page 8-15)
- Engine coolant level (page 8-12)
- Engine oil level (page 8-10)
- Washer fluid level (page 8-18)

▼At Least Monthly

- Tire inflation pressures (page 8-27)

▼At Least Twice a Year (For Example, Every Spring and Fall)

- Automatic transaxle fluid level (page 8-16)
- Power steering fluid level (page 8-16)

You can do the following scheduled maintenance items if you have some mechanical ability and a few basic tools and if you closely follow the directions in this manual.

- Air filter (page 8-19)
- Engine coolant (page 8-12)
- Engine oil (page 8-11)

Owner Maintenance Precautions

Improper or incomplete service may result in problems. This section gives instructions only for items that are easy to perform.

As explained in the Introduction (page 8-2), several procedures can be done only by a qualified service technician with special tools.

Improper owner maintenance during the warranty period may affect warranty coverage. For details, read the separate Mazda Warranty statement provided with the vehicle. If you're unsure about any servicing or maintenance procedure, have it done by an Authorized Mazda Dealer.

There are strict environmental laws regarding the disposal of waste oil and fluids. Please dispose of your waste properly and with due regard to the environment.

We recommend that you entrust the oil and fluid changes of your vehicle to an Authorized Mazda Dealer.

⚠ *WARNING*

Maintenance Procedures:
Performing maintenance work on a vehicle is dangerous if not done properly. You can be seriously injured while performing some maintenance procedures. If you lack sufficient knowledge and experience or the proper tools and equipment to do the work, have it done by a qualified technician.

Running the Engine:
Working under the hood with the engine running is dangerous. It becomes even more dangerous when you wear jewelry or loose clothing.
Either can become entangled in moving parts and result in injury.
Therefore, if you must run the engine while working under the hood, make certain that you remove all jewelry (especially rings, bracelets, watches, and necklaces) and all neckties, scarves, and similar loose clothing before getting near the engine or cooling fan which may turn on unexpectedly.

Electrical Fan and Engine Inspection:
Inspecting the engine with the ignition switch in the ON position is dangerous. The cooling fan could come on unexpectedly even when the engine isn't running. You could be seriously injured by the fan. Turn the ignition switch off and remove the key from the ignition switch when you inspect the engine.

Engine Compartment Overview

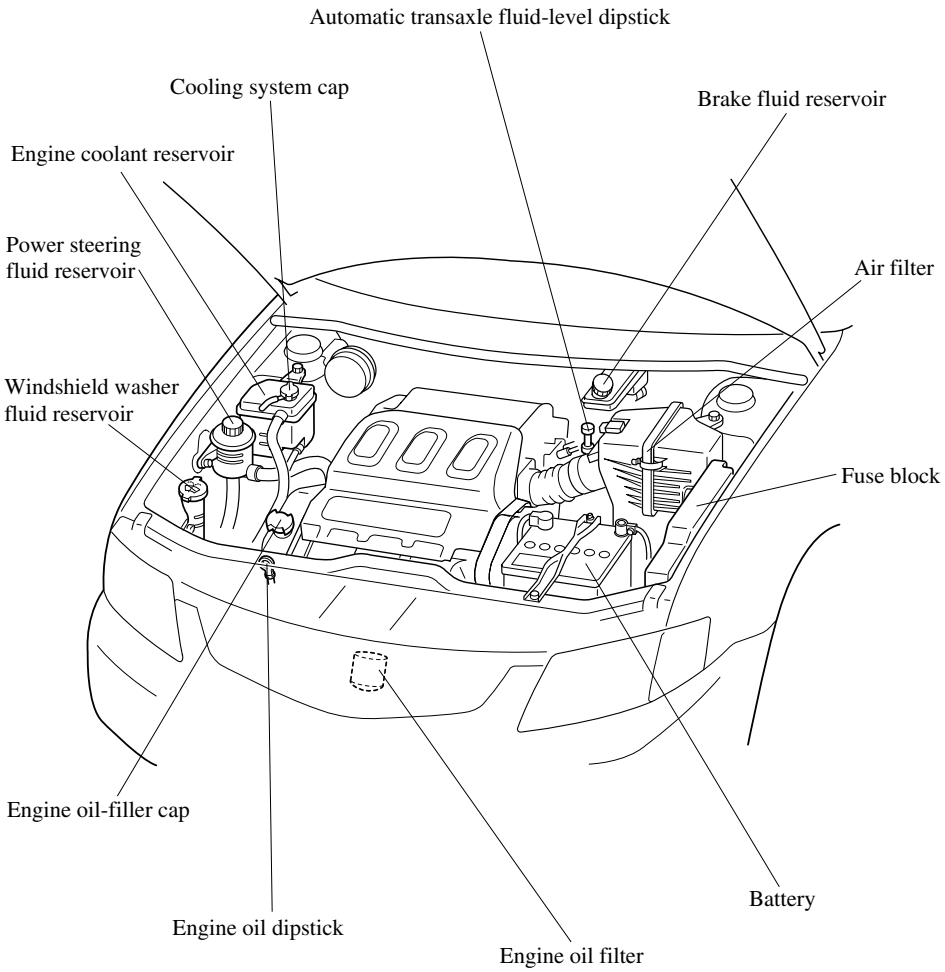

Engine Oil

▼Recommended Oil

Oil container labels provide important information.

(ILSAC)

The quality designation **SL** or **ILSAC** must be on the label.

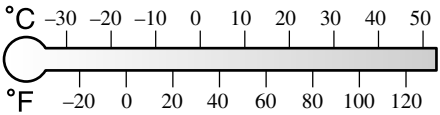

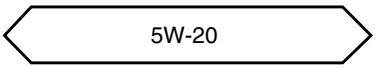

Energy conserving oils are recommended. A chief contribution they make to fuel economy is reducing the amount of fuel necessary to overcome engine friction.

▼Inspecting Engine Oil Level

1. Be sure the vehicle is on a level surface.
2. Warm up the engine to normal operating temperature.
3. Turn it off and wait 5 minutes for the oil to return to the oil pan.
4. Pull out the dipstick, wipe it clean, and reinsert it fully.

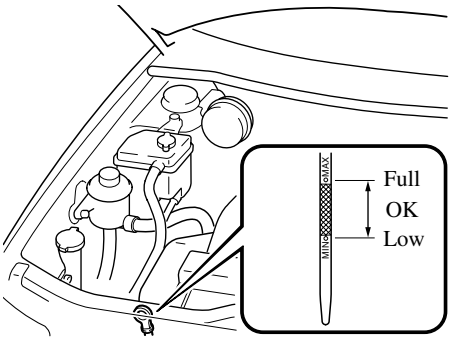

5. Pull it out again and examine the level. It's OK between MIN and MAX. But if it's near or below MIN, add enough oil to bring the level to MAX.

⚠CAUTION

Don't add engine oil over MAX. This may cause engine damage.

6. Make sure the O-ring is positioned properly before reinserting the dipstick.

▼Changing Engine Oil and Filter

Change engine oil and filter according to Scheduled Maintenance (page 8-3).

Please act responsibly—protect the environment and take used oil to a recycling facility. Ask your dealer or a service station for information.

⚠ *WARNING*

Handling Used Engine Oil:
Continuous contact with used engine oil is dangerous. It could cause skin cancer. Always wash with soap and water immediately after changing oil and filter.

⚠ CAUTION

Remove any oil splatter from the exhaust manifold, the exhaust pipe and the shield. Oil left on these areas will smoke when the engine is running.

Changing engine oil

⚠ *WARNING*

Checking or Changing Engine Oil:
Hot engine oil is dangerous. If the engine has been running, the engine oil becomes very hot. You could be seriously burned. Don't check or change the engine oil when the engine is hot.

1. Warm up the engine for a few minutes and turn it off. Remove the oil-filler cap.
2. Remove the drain plug and drain the oil into a suitable container.
3. Replace the plug tightly after the oil has thoroughly drained.
4. Fill the engine with new oil to the MAX mark on the dipstick.
5. Securely reinstall the oil-filler cap.

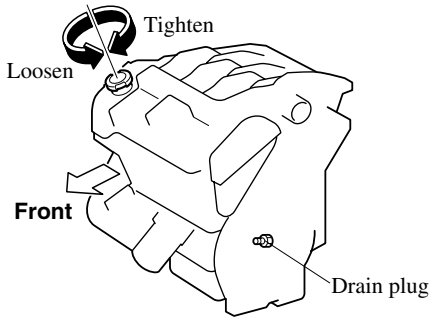

6. Start the engine and inspect around the drain plug for leaks.
7. Turn it off and wait 5 minutes for the oil to return to the oil pan.

Check the oil level and fill to the MAX mark if necessary.

Oil capacity (General reference only, refer to Specifications section for capacities.)

NOTE

- The indicated engine oil capacities are for general reference purposes only. When adding or changing oil, verify the engine oil level with the oil dipstick.
- Use only specified engine oil (page 10-4).

Changing oil filter

Because you need a special tool to retighten the filter, an Authorized Mazda Dealer should do the work.

Engine Coolant

▼Inspecting Coolant Level

⚠ *WARNING*

Hot Engine:
A hot engine is dangerous. If the engine has been running, parts of the engine compartment can become very hot. You could be burned. Carefully inspect the engine coolant in the coolant reservoir, but do not open it. Do not use a match or live flame in the engine compartment. DO NOT ADD COOLANT WHEN THE ENGINE IS HOT.

Cooling Fan and Engine Inspection:
Inspecting the engine with the ignition switch in the ON position is dangerous. The cooling fan could turn on unexpectedly even when the engine isn't running. You could be seriously injured by the fan. Turn the ignition switch off and remove the key from the ignition switch when you inspect the engine.

Cooling System Cap:
When the engine and radiator are hot, scalding coolant and steam may shoot out under pressure and cause serious injury. Don't remove the cooling system cap when the engine and radiator are hot.

Inspect the antifreeze protection and coolant level in the coolant reservoir at least once a year—at the beginning of the winter season—and before traveling where temperatures may drop below freezing.

Inspect the condition and connections of all cooling system and heater hoses. Replace any that are swollen or deteriorated.

The coolant should be at full in the radiator and between the F and L marks on the coolant reservoir when the engine is cool.

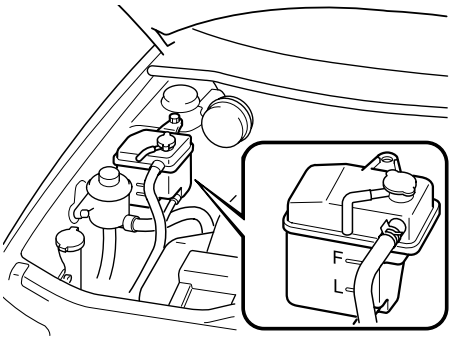

If it's at or near L, add enough coolant to the coolant reservoir to provide freezing and corrosion protection and to bring the level to F.

⚠CAUTION

Radiator coolant will damage paint. Rinse it off quickly.

Do not overfill.
If new coolant is required frequently, consult an Authorized Mazda Dealer.

▼Changing Coolant (Without Rear Heater)

Change coolant according to Scheduled Maintenance (page 8-3).

⚠CAUTION

- Use only soft (demineralized) water in the coolant mixture. Water that contains minerals will cut down on the coolant's effectiveness.
- Don't add only water. Always add a proper coolant mixture.
- The engine has aluminum parts and must be protected by an ethylene-glycol-based coolant to prevent corrosion and freezing.
- DO NOT USE alcohol or methanol antifreeze. DO NOT MIX alcohol or methanol with the coolant. This could damage the cooling system.
- Don't use a solution that contains more than 60 % antifreeze. This would reduce effectiveness.

For mixture percentage:

Protection	Volume	
	Antifreeze solution	Water
Above -16°C (3°F)	35%	65%
Above -26°C (-15°F)	45%	55%
Above -40°C (-40°F)	55%	45%

To change coolant

⚠ WARNING

Removing the Cooling System Cap:
Removing the cooling system cap while the engine is running or hot is dangerous. This might lead to cooling system and engine damage and could result in serious injury from escaping hot coolant or steam. Turn off the engine and wait until it's cool. Even then, be very careful when removing the cap. Wrap a thick cloth around the cap and slowly turn it counterclockwise to the first stop. Step back while the pressure escapes. When you're sure all the pressure is gone, press down on the cap — still using a cloth — turn the cap, and remove it.

1. Remove the cooling system cap.

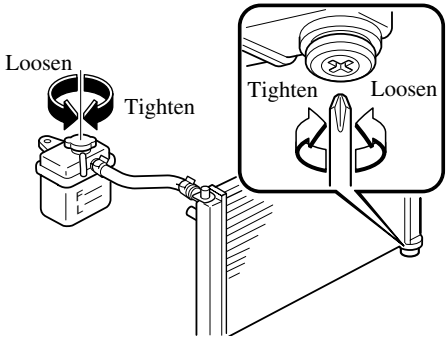

2. Only when the engine is cool, remove the radiator drain plug and drain the coolant into a suitable container. Properly dispose of the used coolant.
3. Flush out the system with running water.
4. Drain the system completely. Insert and tighten the plug. Add as much ethylene-glycol-based coolant and water as necessary to provide freezing and corrosion protection.
5. In extremely cold climates, add the amount recommended in the coolant manufacturer's instructions.
6. Run the engine at idle with the cooling system cap off. Slowly add additional coolant if necessary.
7. At this point, wait until the engine reaches normal operating temperature; then depress the accelerator two or three times. Add more coolant, if necessary, until the system is full.
8. Install the cooling system cap. Inspect all connections for leaks. Inspect the level in the coolant reservoir one more time.

▼Changing Coolant (With Rear Heater)

Have an Authorized Mazda Dealer change the coolant according to the Scheduled Maintenance (page 8-3).

Brake Fluid

▼Inspecting Brake Fluid Level

Inspect the fluid level in the reservoir regularly. It should be kept at MAX.
The level normally drops with accumulated distance, a condition associated with wear of brake linings. If it is excessively low, have the brake system inspected by an Authorized Mazda Dealer.

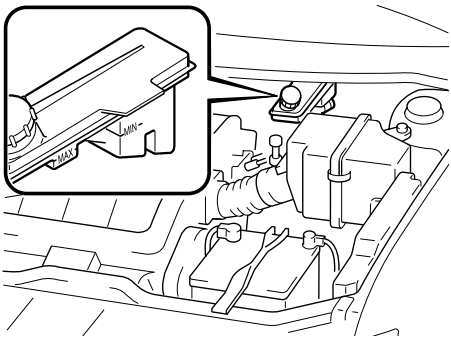

▼Adding Brake Fluid

⚠ *WARNING*

Spilled Brake Fluid:
Spilled brake fluid is dangerous. If it gets in your eyes, they could be seriously injured. If this happens, immediately flush your eyes with water and get medical attention. Brake fluid spilled on a hot engine could cause a fire. Be careful not to spill brake fluid on yourself or on the engine.

Low Brake Fluid Levels:
Low brake fluid levels are dangerous. Low levels could signal brake lining wear or a brake system leak. Your brakes could fail and cause an accident. If you find a low fluid level, have the brakes inspected.

If the fluid level is low, add fluid until it reaches MAX.
Before adding fluid, thoroughly clean the area around the cap.

⚠ CAUTION

- Brake fluid will damage painted surfaces. If brake fluid does get on a painted surface, wipe it off immediately.
- Using nonspecified brake fluids (page 10-4) will damage the system. Mixing different fluids will also damage it.
  If the brake system frequently requires new fluid, consult an Authorized Mazda Dealer.

Power Steering Fluid

▼Inspecting Power Steering Fluid Level

⚠CAUTION

To avoid damage to the power steering pump, don't operate the vehicle for long periods when the power steering fluid level is low.

NOTE

Use specified power steering fluid (page 10-4).

Inspect the fluid level in the reservoir at each engine oil change with the engine off and cold. Add fluid if necessary; it does not require periodic changing.

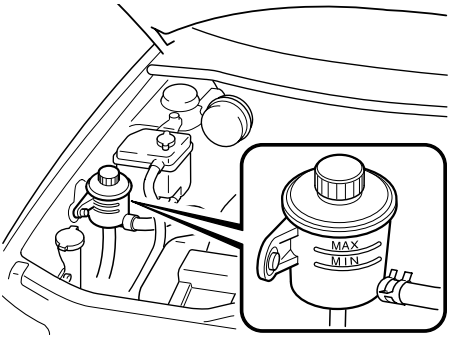

The level must be kept between MIN and MAX.

Visually examine the lines and hoses for leaks and damage.

If new fluid is required frequently, consult an Authorized Mazda Dealer.

Automatic Transaxle Fluid (ATF)

▼Inspecting Automatic Transaxle Fluid Level

The automatic transaxle fluid level should be inspected regularly. Measure it as described below.

The volume of fluid changes with the temperature. Fluid must be checked at idle without driving at normal operating temperature.

⚠CAUTION

- Low fluid level causes transaxle slippage. Overfilling can cause foaming, loss of fluid, and transaxle malfunction.
- Use specified fluid (page 10-4). A nonspecified fluid could result in transaxle malfunction and failure.

1. Park on a level surface and set the parking brake firmly.
2. Idle the engine about two minutes. Push down on the brake pedal.
3. Move the shift lever through all ranges and set it at P.

⚠ *WARNING*

Sudden Vehicle Movement:
Shifting the shift lever without first depressing the brake pedal is dangerous. The vehicle could move suddenly and cause an accident. Make sure the brake pedal is applied before shifting the shift lever.

4. With the engine still idling, pull out the dipstick, wipe it clean, and put it back.
5. Pull it out again.
   The proper fluid level is marked on the dipstick as follows.

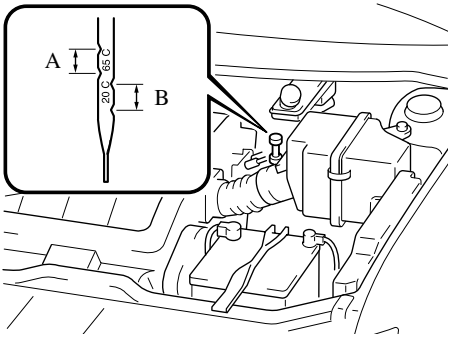

Fluid hot scale A

When the vehicle has been driven and the fluid is at normal operating temperature, about 65°C (150°F), the level must be between Full and Low.

Fluid cold scale B

When the engine has not been running and the outside temperature is about 20°C (70°F), the level must be between Full and Low.

⚠ CAUTION

- Use the cold scale only as a reference.
- If outside temperature is lower than about 20°C (70°F), start the engine and inspect the fluid level after the engine reaches operating temperature.
- If the vehicle has been driven for an extended period at high speeds or in city traffic in hot weather, inspect the level only after stopping the engine and allowing the fluid to cool for 30 minutes.

Fully insert the dipstick. When adding fluid, inspect with the dipstick to make sure it doesn't pass full.

NOTE

Inspect the fluid on both sides of the dipstick in a well lit area for an accurate reading.

Washer Fluid

▼Inspecting Washer Fluid Level

⚠ *WARNING*

Substitute Washer Fluid:
Using radiator antifreeze as washer fluid is dangerous. If sprayed on the windshield, it will dirty the windshield, affect your visibility, and could result in an accident. Use only windshield washer fluid or plain water in the reservoir.

Using Washer Fluid Without Anti-freeze Protection in Cold Weather:
Operating your vehicle in temperatures below 4 degrees C (40 degrees F) using washer fluid without anti-freeze protection is dangerous as it could cause impaired windshield vision and result in an accident. In cold weather, always use washer fluid with anti-freeze protection.

NOTE

State or local regulations may restrict the use of volatile organic compounds (VOCs), which are commonly used as anti-freeze agents in washer fluid. A washer fluid with limited VOC content should be used only if it provides adequate freeze resistance for all regions and climates in which the vehicle will be operated.

Inspect fluid level in the washer fluid reservoir; add fluid if necessary.

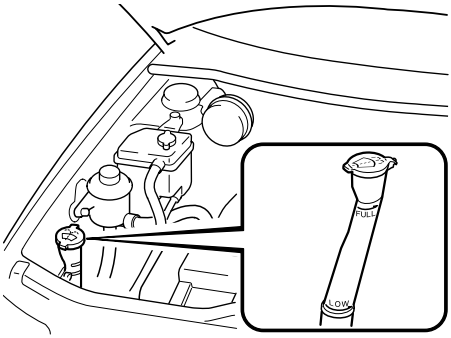

The top of the float should be between FULL and LOW.

Use plain water if washer fluid is unavailable.
But use only washer fluid in cold weather to prevent it from freezing.

NOTE

Front and rear washer fluid is supplied from the same reservoir.

Body Lubrication

All moving points of the body, such as door and hood hinges and locks, should be lubricated each time the engine oil is changed. Use a nonfreezing lubricant on locks during cold weather.

Make sure the engine hood's secondary latch keeps the hood from opening when the primary latch is released.

Air Filter

⚠CAUTION

Don't drive without an air filter. This could result in excessive engine wear.

This air filter may be cleaned with compressed air and reused, or replaced, depending on its condition. Unless it is very dirty, simply shake it to remove foreign particles. Each time you inspect it, wipe inside the air cleaner housing with a damp cloth.

▼Replacing the Air Filter

NOTE

If the vehicle is operated in very dusty or sandy areas, replace the filter more often than recommended intervals.

1. Remove the bolt and unfasten the clamps on the air cleaner housing.

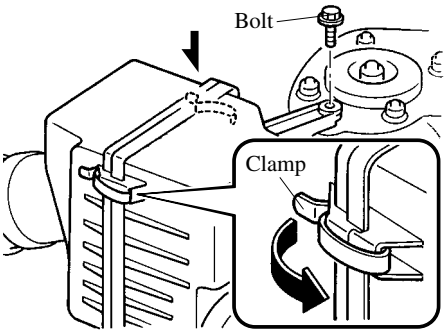

2. Separate the air cleaner housing and remove the filter.

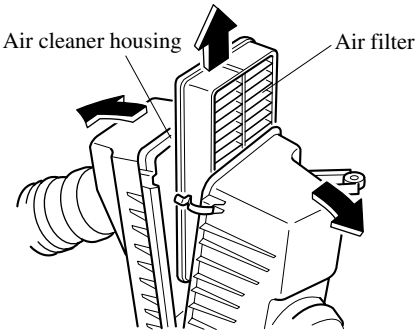

3. Wipe inside the air cleaner housing with a damp cloth.
4. Clean or replace the filter.
5. Install in the reverse order of removal.

Replace the filter according to Scheduled Maintenance (page 8-3).

Wiper Blades

⚠CAUTION

- Hot waxes applied by automatic car washers have been known to affect the cleanability of windows.
- To prevent damage to the wiper blades, don't use gasoline, kerosene, paint thinner, or other solvents on or near them.

Contamination of either the windshield or the blades with foreign matter can reduce wiper effectiveness. Common sources are insects, tree sap, and hot wax treatments used by some commercial car washes.

If the blades are not wiping properly, clean the window and blades with a good cleaner or mild detergent; then rinse thoroughly with clean water. Repeat if necessary.

▼Replacing Windshield Wiper Blades

When the wipers no longer clean well, the blades are probably worn or cracked. Replace them.

⚠CAUTION

To prevent damage to the wiper arms and other components, don't move the wipers by hand.

1. Raise the wiper arm and turn the blade assembly to expose the plastic locking clip.
   Compress the clip and slide the assembly downward; then lift it off the arm.

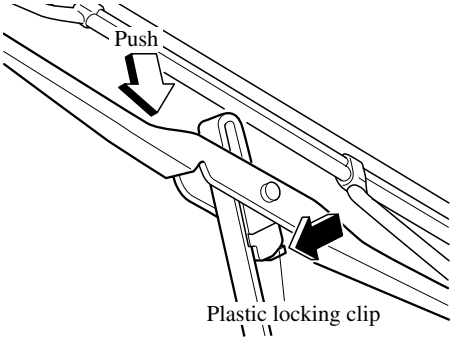

⚠CAUTION

To prevent damage to the windshield, don't let the wiper arm fall on it.

2. Hold the end of the rubber and pull until the tabs are free of the metal support.

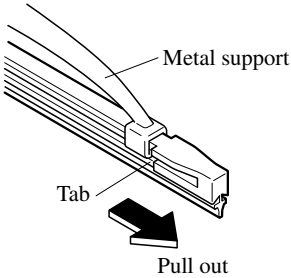

3. Remove the metal stiffeners from the blade rubber and install them in new blades.

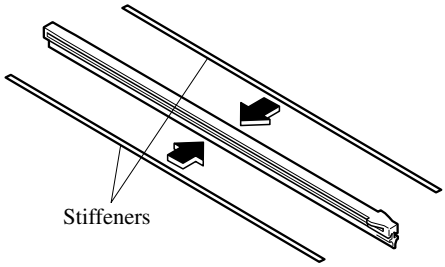

⚠ CAUTION

- Don't bend the stiffeners. You need to use them again.
- If the metal stiffeners are switched, the blade's wiping efficiency could be reduced.
  So don't use the driver's side metal stiffeners on the passenger's side, or vice versa.
- Be sure to reinstall the metal stiffeners in the new blade rubber so that the curve is the same as it was in the old blade rubber.

4. Carefully insert the new blade rubber. Then install the blade assembly in the reverse order of removal.

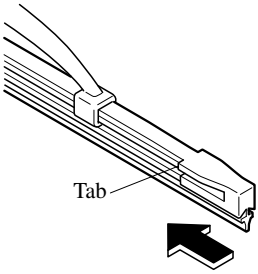

NOTE

Install the blade so that the tabs are toward the bottom of the wiper arm.

▼ Replacing Rear Window Wiper Blade

When the wiper no longer cleans well, the blade is probably worn or cracked. Replace it.

⚠ CAUTION

To prevent damage to the wiper arm and other components, don't move the wiper by hand.

1. Raise the wiper arm and turn the blade assembly to expose the plastic locking clip.
   Compress the clip and slide the assembly downward; then lift it off the arm.

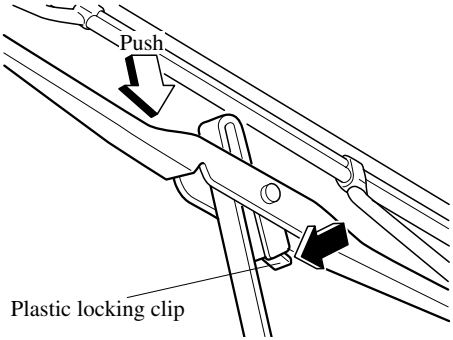

⚠ CAUTION

To prevent damage to the rear window, don't let the wiper arm fall on it.

2. Pull down the blade rubber and slide it out of the blade holder.

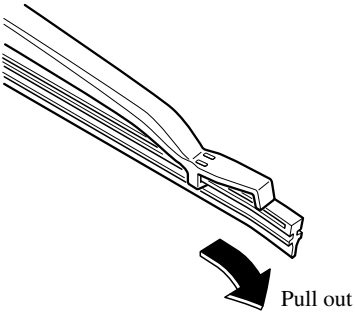

3. Remove the metal stiffeners from the blade rubber and install them in new blades.

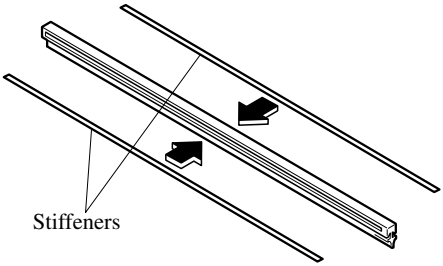

⚠ CAUTION

Don't bend the stiffeners. You need to use them again.

4. Carefully insert the new blade rubber. Then install the blade assembly in the reverse order of removal.

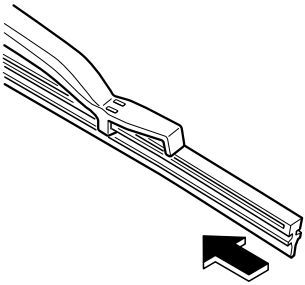

Battery

⚠ *WARNING*

Battery-Related Lead Materials:
Battery posts, terminals and related accessories contain lead and lead compounds, chemicals known to the State of California to cause cancer and reproductive harm. Wash hands after handling.

Follow These Precautions Carefully
To ensure safe and correct handling of the battery, read the following precautions carefully before using the battery or inspecting it.

Eye Protection:
Working without eye protection is dangerous. Battery fluid contains SULFURIC ACID which could cause blindness if splashed into in your eyes. Also, hydrogen gas produced during normal battery operation, could ignite and cause the battery to explode. Always wear eye protection when working near the battery.

Spilled Battery Fluid:
Spilled battery fluid is dangerous.
Battery fluid contains SULFURIC ACID which could cause serious injuries if it gets in eyes, skin or clothing. If this happens, immediately flush your eyes with water for 15 minutes or wash your skin thoroughly and get medical attention. Wear eye protection and protective gloves to prevent contact with battery fluid.

⚠ *WARNING*

Children and Batteries:
Allowing children to play near batteries is dangerous. Battery fluid could cause serious injuries if it gets in the eyes or on the skin. Always keep batteries out of the reach of children.

Keep Flames Away:
Flames and sparks near open battery cells are dangerous. Hydrogen gas, produced during normal battery operation, could ignite and cause the battery to explode. An exploding battery can cause serious burns and injuries. Keep all flames including cigarettes and sparks away from open battery cells. When working near a battery, do not allow metal tools to contact the positive (+) or negative (−) terminal of the battery. Do not allow the positive (+) terminal to contact the vehicle body.

Battery-Related Explosion:
Flames and sparks near open battery cells are dangerous. Hydrogen gas, produced during normal battery operation, could ignite and cause the battery to explode. An exploding battery can cause serious burns and injuries. Keep all flames, including cigarettes, and sparks away from open battery cells.

▼Battery Maintenance

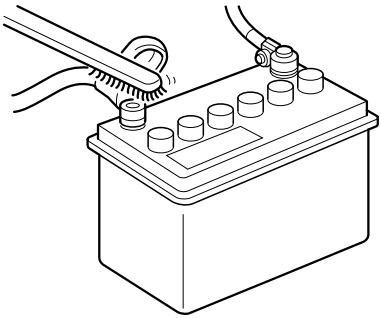

To get the best service from a battery:

- Keep it securely mounted.
- Keep the top clean and dry.
- Keep terminals and connections clean, tight, and coated with petroleum jelly or terminal grease.
- Rinse off spilled electrolyte immediately with a solution of water and baking soda.
- If the vehicle will not be used for an extended time, disconnect the battery cables.

▼Inspecting Electrolyte Level

A low level of electrolyte fluid will cause the battery to discharge quickly.

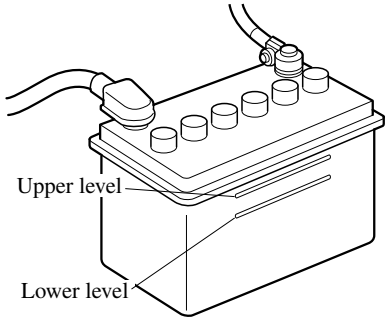

Inspect the electrolyte level at least once a week. If it's low, remove the cap and add enough distilled water to bring the level between the upper and lower level (illustration).

Don't overfill.
Examine the specific gravity of the electrolyte with a hydrometer, especially during cold weather. If it's low, recharge the battery.

Tires

For reasons of proper performance, safety, and better fuel economy, always maintain recommended tire inflation pressures and stay within the recommended load limits and weight distribution.

⚠ WARNING

Using Different Tire Types:
Driving your vehicle with different types of tires is dangerous. It could cause poor handling and poor braking; leading to loss of control. Except for the limited use of the temporary spare tire, use only the same type tires (radial, bias-belted, bias-type) on all four wheels.

Using Wrong-Sized Tires:
Using any other tire size than what is specified for your Mazda (page 10-7) is dangerous. It could seriously affect ride, handling, ground clearance, tire clearance, and speedometer calibration. This could cause you to have an accident. Use only tires that are the correct size specified for your Mazda.

▼ Tire Inflation Pressure

⚠ WARNING

Incorrect Tire Inflation:
Overinflation or underinflation of tires is dangerous. Adverse handling or unexpected tire failure could result in a serious accident. Always inflate the tires to the correct pressure (page 10-7).

Inspect all tire pressures monthly (including the spare) when the tires are cold. Maintain recommended pressures for the best ride, top handling, and minimum tire wear.

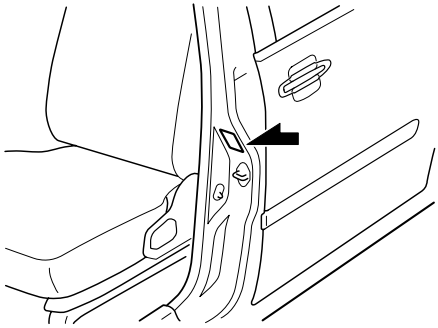

Refer to the specification charts (page 10-7).

NOTE

- Warm tires normally exceed recommended pressures. Don't release air from warm tires to adjust the pressure.
- Underinflation can cause reduced fuel economy and poor sealing of the tire bead, which will deform the wheel and cause separation of tire from rim.
- Overinflation can produce a harsh ride and a greater possibility of damage from road hazards. Keep your tire pressure at the correct levels. If one frequently needs inflating, have it inspected.

▼ Tire Rotation

To equalize tread wear, rotate the tires every 12,000 km (7,500 miles)/8,000 km* (5,000 miles) or sooner if irregular wear develops. During rotation, inspect them for correct balance.

* Unique driving conditions for USA, Canada and Puerto Rico

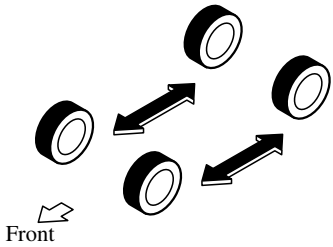

Do not include (TEMPORARY USE ONLY) spare tire in rotation.

Also, inspect them for uneven wear and damage. Abnormal wear is usually caused by one or a combination of the following:

- Incorrect tire pressure
- Improper wheel alignment
- Out-of-balance wheel
- Severe braking

After rotation, inflate all tire pressures to specification (page 10-7) and inspect the lug nuts for tightness.

⚠ CAUTION

Rotate unidirectional tires and radial tires that have an asymmetrical tread pattern or studs only from front to rear, not from side to side. Tire performance will be weakened if rotated from side to side.

▼ Replacing a Tire

⚠ *WARNING*

Worn Tires:
Driving with worn tires is dangerous. Reduced braking, steering, and traction could result in an accident. Always use tires that are in good condition.

If a tire wears evenly, a wear indicator will appear as a solid band across the tread. Replace the tire when this happens.

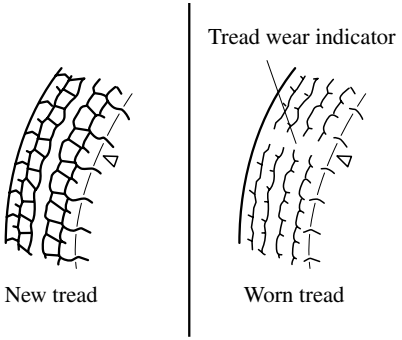

You should replace it before the band is across the entire tread.

▼ Temporary Spare Tire

Inspect the temporary spare tire at least monthly to make sure it's properly inflated and stored.
The temporary spare tire is easier to handle because of its construction. It is lighter and smaller than a conventional tire and should be used only for an emergency and only for a short distance.

Use the temporary only until the conventional tire is repaired, which should be as soon as possible.

Maintain its pressure at 420 kPa (4.2 kgf/cm^2 or bar, 60 psi).

⚠ CAUTION

- Don't use your temporary spare tire rim with a snow tire or a conventional tire. Neither will properly fit and could damage both tire and rim.
- The temporary spare tire has a tread life of up to 5,000 km (3,000 miles), depending on road conditions and driving habits.
- The temporary spare tire is for limited use, however, if the tread wear solid-band indicator appears, replace the tire with the same type of temporary spare (page 8-29).

▼ Replacing a Wheel

⚠ *WARNING*

Using a Wrong-Sized Wheel:
Using a wrong-sized wheel is dangerous. Braking and handling could be affected, leading to loss of control and an accident. Always use wheels of the correct size on your vehicle.

⚠ CAUTION

A wrong-sized wheel may adversely affect:

- Tire fit
- Wheel and bearing life
- Ground clearance
- Snow-chain clearance
- Speedometer calibration
- Headlight aim
- Bumper height

When replacing a wheel, make sure the new one is the same as the original factory wheel in diameter, rim width, and offset.

Proper tire balancing provides the best riding comfort and helps reduce tread wear. Out-of-balance tires can cause vibration and uneven wear, such as cupping and flat spots.

Light Bulbs

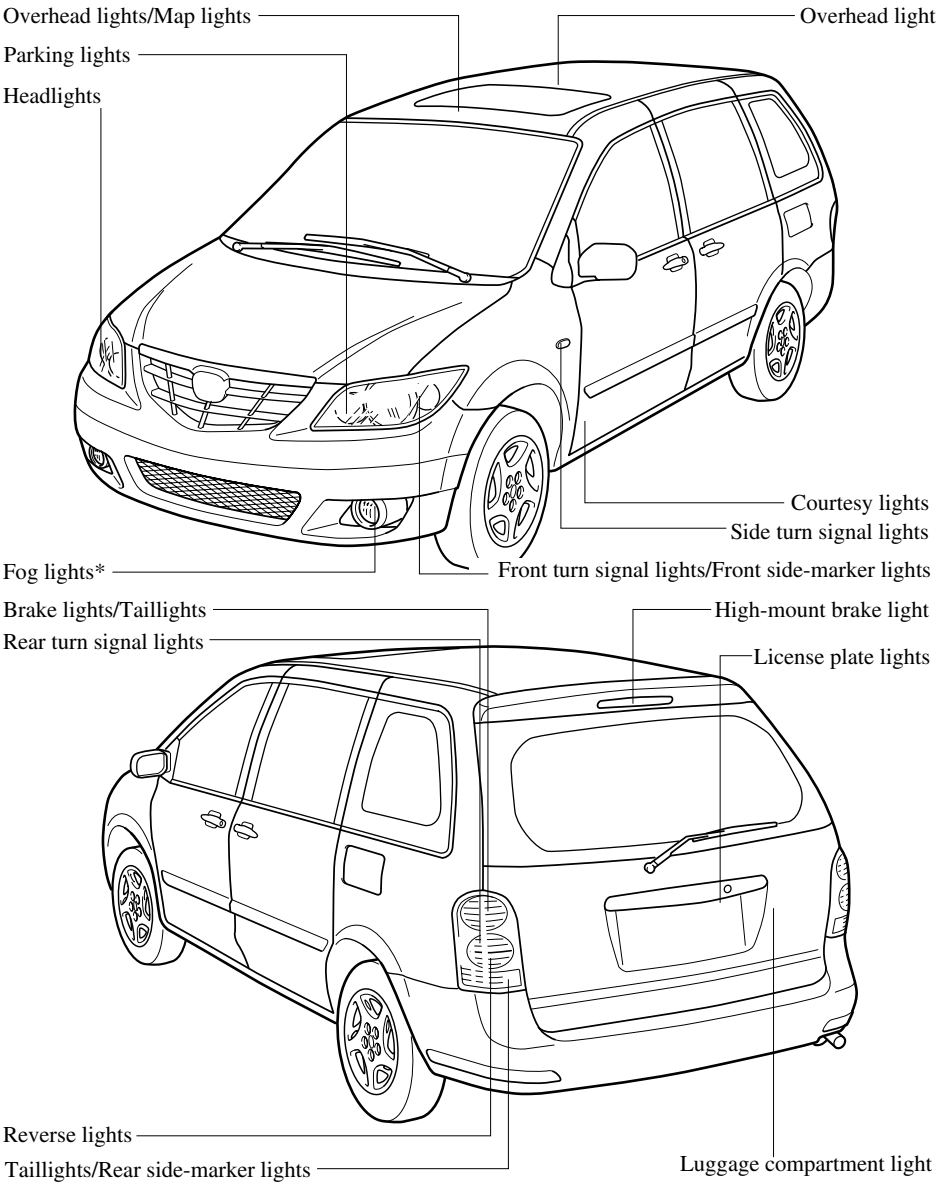

*Some models.

Your Mazda's headlights and fog lights have replaceable halogen bulbs.

⚠ WARNING

Handling Halogen Bulbs:
When a halogen bulb breaks, it is dangerous. These bulbs contain pressurized gas. If one is broken, it will explode and serious injuries could be caused by the flying glass.
If the glass portion is touched with bare hands, body oil could cause the bulb to overheat and explode when lit. Never touch the glass portion of the bulb with your bare hands and always wear eye protection when handling or working around halogen bulbs.

Children and Halogen Bulbs:
Playing with a halogen bulb is dangerous. Serious injuries could be caused by dropping a halogen bulb or breaking it some other way.
Always keep halogen bulbs out of the reach of children.

▼ Replacing Exterior Light Bulbs

Replacing a headlight bulb

1. Make sure the ignition switch is turned off and the headlight switch is off.
2. Lift the hood and find the bulb in the rear of the headlight unit.
3. Detach the electrical connector from the bulb by squeezing the tabs and pulling it to the rear.

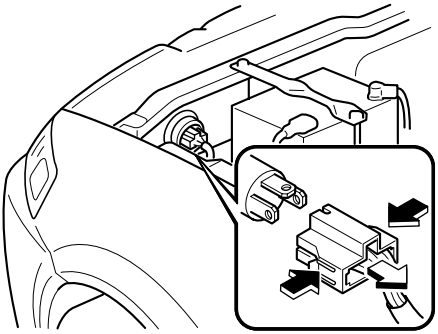

4. Pull off the sealing cover.
5. Unhook the bulb retaining spring.

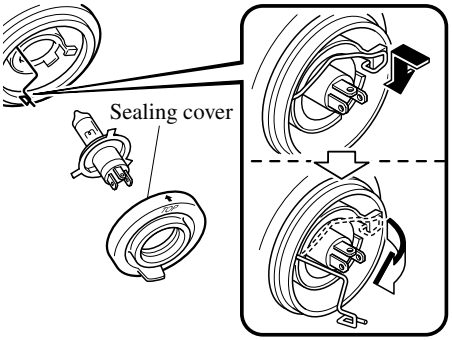

6. Swing the retaining spring out and away to free the headlight bulb.

7. Carefully remove the headlight bulb from the socket by pulling it straight back.
8. Replace the bulb.
9. Install the new bulb in the reverse order of removal.

NOTE

- Use the protective cover and carton for the replacement bulb to dispose of the old bulb promptly and out of the reach of children.
- When reinstalling the sealing cover, make sure ⇧ faces up.

Replacing a fog light bulb*

1. Turn the screw counterclockwise and remove it, then partially peel back the mudguard.

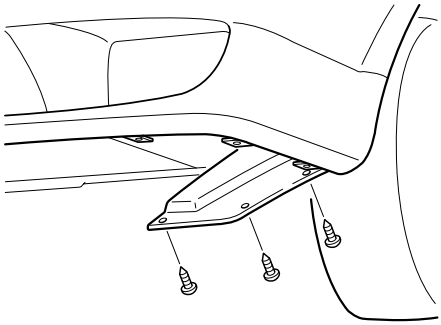

2. If a retaining spring is equipped, swing it outward.

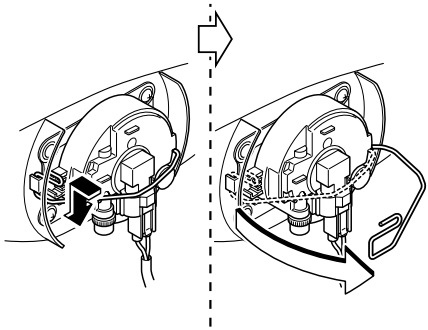

3. Disconnect the socket from the electrical connector by pressing the tab on the connector with your finger.
4. Turn the bulb counterclockwise and remove it. Carefully remove the fog light bulb from its socket by pulling it straight back.

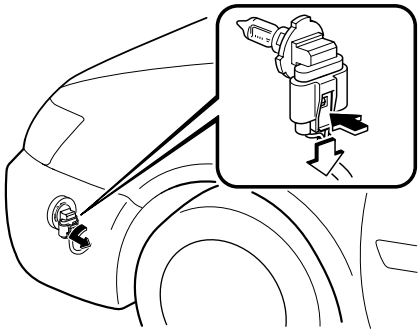

5. Install the new bulb in the reverse order of removal.

*Some models.

Front turn signal lights/Front side-marker lights

1. Turn the screw counterclockwise and remove it.
2. Turn the center section of the plastic retainer counterclockwise and remove it, then partially peel back the mudguard.

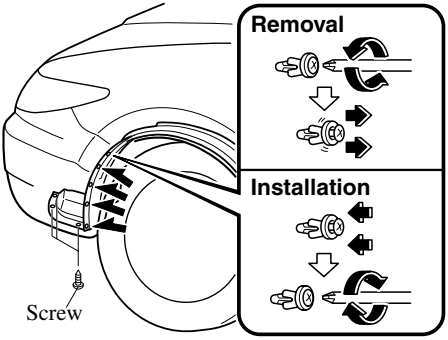

3. Turn the socket and bulb assembly counterclockwise and remove it.
4. Remove the bulb by pushing it in slightly and turning it counterclockwise.

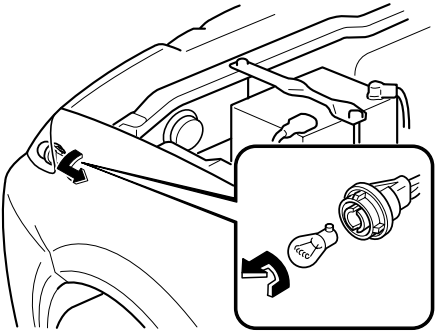

5. Install the new bulb in the reverse order of removal.

Side turn signal lights

1. Slide the unit as shown in the figure to remove it.
2. Detach the electrical connector from the unit by pulling it to the rear.

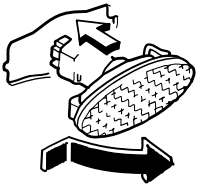

3. Install the new side turn signal unit in the reverse order of removal.

NOTE
Bulb replacement is not possible because it is built into the unit. Replace the unit.

Parking lights

Due to the complexity and difficulty of the procedure, the bulbs should be replaced by an Authorized Mazda Dealer.

Brake lights/Taillights, Rear turn signal lights, Reverse lights, Taillights/Rear-side marker lights

1. Remove the bolts with a Phillips screwdriver and remove the rear combination component.
2. Turn the socket and bulb assembly counterclockwise and remove it.
3. Disconnect the bulb from the socket.

① **Brake lights/Taillights**
② **Rear turn signal lights**
③ **Reverse lights**
④ **Taillights/Rear side-marker lights**

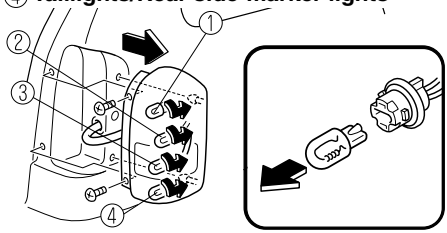

4. Install the new bulb in the reverse order of removal.

High-mount brake lights

1. Remove the liftgate upper trim.
2. Push the tab as shown in the figure, and then remove the high-mount brake light unit.

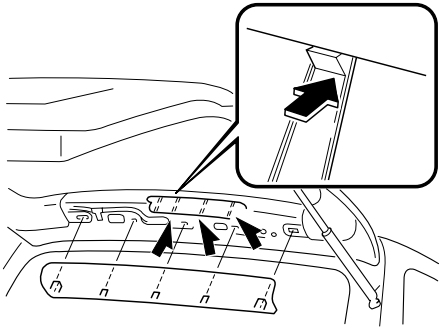

3. Turn the socket and bulb assembly counterclockwise and remove it.
4. Disconnect the bulb from the socket.

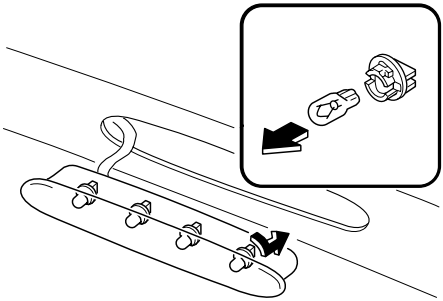

5. Install the new bulb in the reverse order of removal.

NOTE
An unsecured high-mount brake light will allow water to leak into the vehicle. Make sure the high-mount brake light is tightly fastened to the vehicle and if water still leaks, consult an Authorized Mazda Dealer.

License plate lights

1. Slide the unit as shown in the figure to remove it.
2. Turn the socket and bulb assembly counterclockwise and remove it.
3. Disconnect the bulb from the socket.

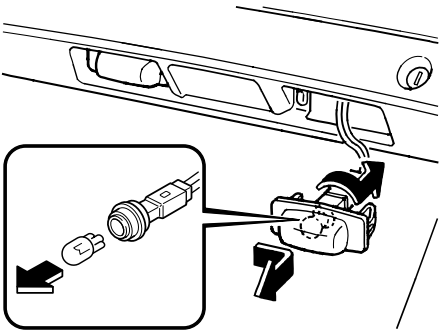

4. Install the new bulb in the reverse order of removal.

▼ Replacing Interior Light Bulbs

Overhead light/Map lights

1. Wrap a small flathead screwdriver with a soft cloth to prevent damage to the lens and remove the lens by carefully prying on the edge of the lens with the screwdriver.
2. Disconnect the bulb by pulling it out.

Without sunroof, with overhead console

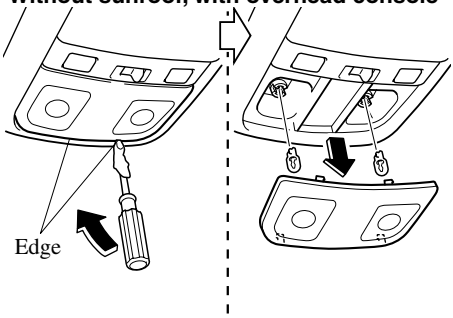

Without either sunroof or overhead console

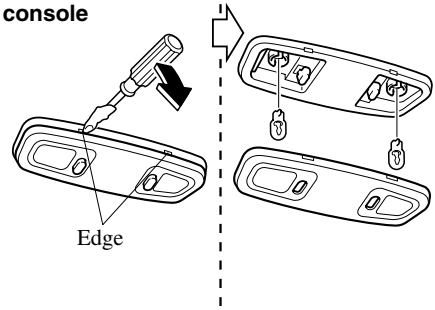

With sunroof

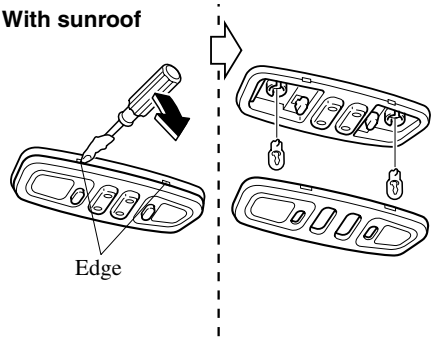

3. Install the new bulb in the reverse order of removal.

Overhead light, Courtesy lights, Vanity mirror lights*

1. Wrap a small flathead screwdriver with a soft cloth to prevent damage to the lens and remove the lens by carefully prying on the edge of the lens with the screwdriver.
2. Disconnect the bulb by pulling it out.

Overhead light

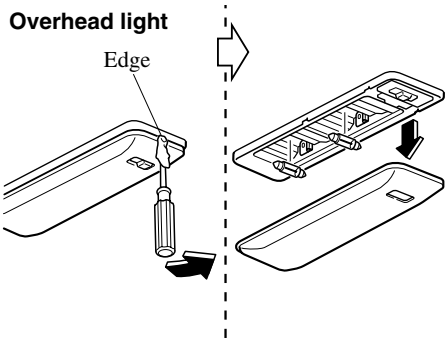

Courtesy lights

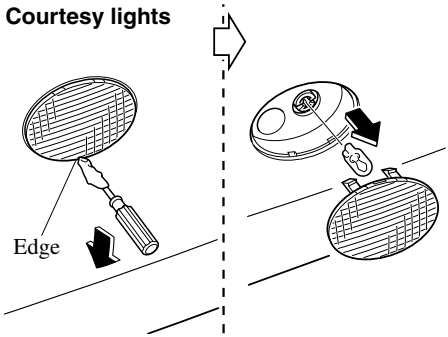

Vanity mirror lights

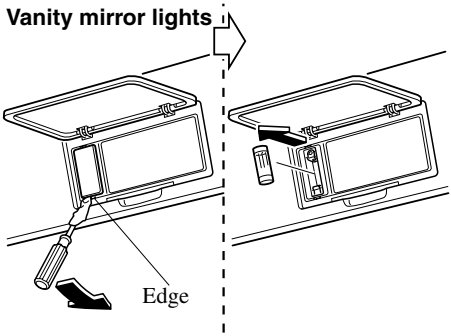

3. Install the new bulb in the reverse order of removal.

*Some models.

Luggage compartment light

1. Wrap a flathead screwdriver with a soft cloth to prevent damage to the trim and gently insert it in the luggage compartment light as shown in the figure, and then remove the luggage compartment light unit.
2. Disconnect the bulb by pulling it out.

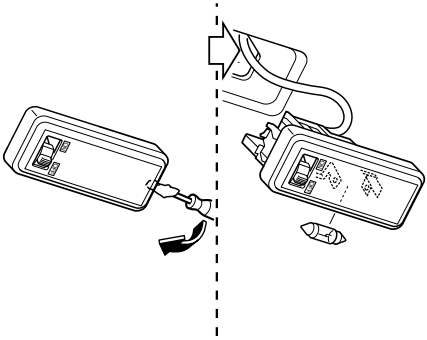

3. Install the new bulb in the reverse order of removal.

Fuses

Your vehicle's electrical system is protected by fuses.

If any lights, accessories, or controls don't work, inspect the appropriate circuit protector. If a fuse has blown, the inside element will be melted.

If the same fuse blows again, avoid using that system and consult an Authorized Mazda Dealer as soon as possible.

▼Fuse Replacement

If the electrical system doesn't work, first inspect fuses on the driver's side.

1. Turn off the ignition switch and other switches.
2. Open the fuse panel cover.

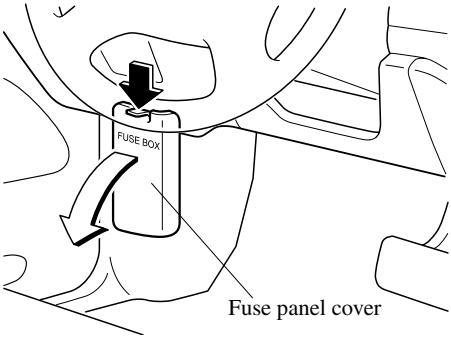

3. Pull the fuse straight out with the fuse puller provided on the fuse panel.

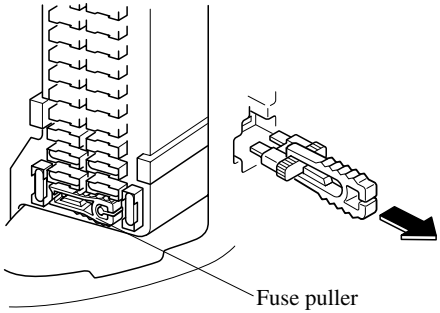

4. Inspect it and replace if it's blown.

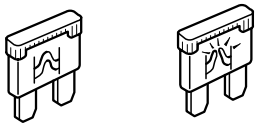

5. Push in a new fuse of the same rating, and make sure it fits tightly. If it doesn't, have an Authorized Mazda Dealer install it.
   If you have no spare fuses, borrow one of the same rating from a circuit not essential to vehicle operation, such as the AUDIO circuit.

⚠CAUTION

Always replace a fuse with one of the same rating. Otherwise you may damage the electric system.

If the headlights or other electrical components don't work and the fuses in the cabin are OK, inspect the fuse block under the hood. If a fuse is blown, it must be replaced. Follow these steps:

1. Turn off the ignition switch and all other switches.
2. Remove the fuse block cover.

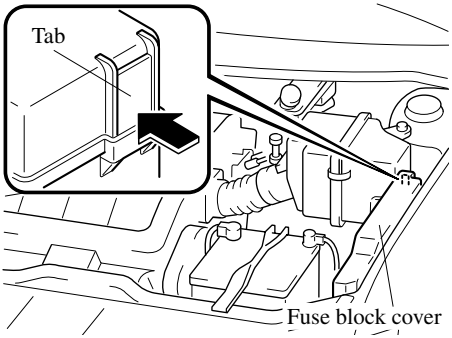

3. If a fuse is blown, replace it with a new one **of the same rating**.

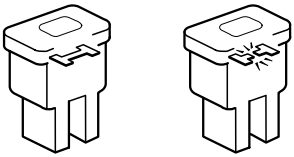

NOTE

To replace the MAIN fuse, contact an Authorized Mazda Dealer (page 8-40).

▼Fuse Panel Description

Fuse block (Engine compartment)

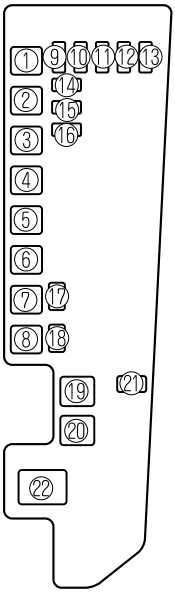

DESCRIPTION		FUSE RATING	PROTECTED COMPONENT
1	DEFOG	40A	Rear window defroster
2	BTN	60A	STOP, HAZARD, ROOM, D.LOCK and DRL fuses
3	ABS	60A	Antilock brake system*, For protection of various circuits
4	FAN1	30A	Cooling fan
5	FAN2	30A	Cooling fan
6	HEATER	40A	Heater
7	R.HEAT	30A	Rear heater*, For protection of various circuits
8	IG KEY2	40A	A/C, P.WIND*, MOONROOF*and R.WIP fuses
9	A/C	10A	Air conditioner, For protection of various circuits

DESCRIPTION		FUSE RATING	PROTECTED COMPONENT
10	TAIL	15A	Taillights
11	AC PWR	15A	Inverter
12	HORN	15A	Horn
13	FOG	15A	For protection of various circuits
14	EEC	5A	For protection of various circuits
15	HEAD L	15A	Headlight-left
16	HEAD R	15A	Headlight-right
17	HID L	20A	—
18	HID R	20A	—
19	IG KEY1	60A	METER, ENGINE and WIPER fuses
20	EGI INJ	30A	For protection of various circuits
21	FUEL PUMP	20A	Fuel pump
22	MAIN	120A	For protection of all circuits

*Some models.

Fuse block (Driver's side)

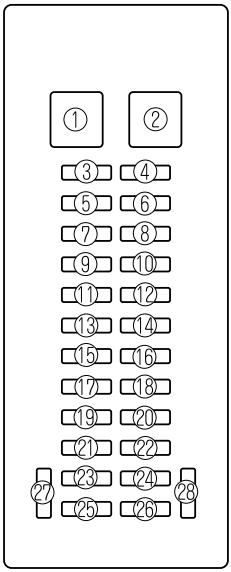

DESCRIPTION		FUSE RATING	PROTECTED COMPONENT
1	P.WIND	30A	Power windows*, For protection of various circuits
2	WIPER	20A	Windshield wipers and washer
3	SUN ROOF	15A	Moonroof*, For protection of various circuits
4	R.WIP	10A	Rear window wiper and washer
5	SEAT	20A	For protection of various circuits
6	M.DEF	10A	Mirror defroster*, For protection of various circuits
7	A/C	10A	Air conditioner, For protection of various circuits
8	DRL	10A	For protection of various circuits
9	—	—	—
10	H/CLEAN	20A	For protection of various circuits
11	—	—	—

DESCRIPTION		FUSE RATING	PROTECTED COMPONENT
12	HAZARD	10A	Hazard warning flashers
13	ROOM	15A	Overhead lights, Map lights, Luggage compartment light
14	AUX POWER	25A	Accessory socket
15	CLOSER LH	20A	For protection of various circuits
16	AUDIO	10A	Audio system, For protection of various circuits
17	D.LOCK	30A	Power door locks*, For protection of various circuits
18	P/SEAT	30A	Power seat*
19	ENGINE	10A	Engine control system
20	METER	10A	Instrument cluster
21	STOP	15A	Brake lights
22	CLOSER RH	20A	For protection of various circuits

*Some models.

DESCRIPTION		FUSE RATING	PROTECTED COMPONENT
23	ACC. DELAY	30A	Power windows delay, For protection of various circuits
24	METER	15A	Instrument cluster, INH switch
25	ST.SIGN	10A	Starter signal
26	CIGAR	25A	Lighter
27	—	—	—
28	—	—	—

How to Minimize Environmental Paint Damage

The paintwork on your Mazda represents the latest technical developments in composition and methods of application.

Environmental hazards, however, can harm the paint's protective properties, if proper care is not taken.

Here are some examples of possible damage, with tips on how to prevent them.

▼Etching Caused by Acid Rain or Industrial Fallout

Occurrence

Industrial pollutants and vehicle emissions drift into the air and mix with rain or dew to form acids. These acids can settle on a vehicle's finish. As the water evaporates, the acid becomes concentrated and can damage the finish.
And the longer the acid remains on the surface, the greater the chance is for damage.

Prevention

It is necessary to wash and wax your vehicle to preserve its finish according to the instructions in this section. These steps should be taken immediately after you suspect that acid rain has settled on your vehicle's finish.

▼Damage Caused by Bird Dropping, Insects, or Tree Sap

Occurrence

Bird droppings contain acids. If these aren't removed they can eat away the clear and color base coat of the vehicle's paintwork.

When insects stick to the paint surface and decompose, corrosive compounds form. These can erode the clear and color base coat of the vehicle's paintwork if they are not removed.

Tree sap will harden and adhere permanently to the paint finish. If you scratch the sap off while it is hard, some vehicle paint could come off with it.

Prevention

It is necessary to have your Mazda washed and waxed to preserve its finish according to the instructions in this section. This should be done as soon as possible.

Bird droppings can be removed with a soft sponge and water. If you are traveling and these are not available, a moistened tissue may also take care of the problem. The cleaned area should be waxed according to the instructions in this section.
Insects and tree sap are best removed with a soft sponge and water or a commercially available chemical cleaner.

Another method is to cover the affected area with dampened newspaper for one to two hours. After removing the newspaper, rinse off the loosened debris with water.

▼Water Marks

Occurrence

Rain, fog, dew, and even tap water can contain harmful minerals such as salt and lime. If moisture containing these minerals settles on the vehicle and evaporates, the minerals will concentrate and harden to form white rings. The rings can damage your vehicle's finish.

Prevention

It is necessary to wash and wax your vehicle to preserve its finish according to the instructions in this section. These steps should be taken immediately after you find water marks on your vehicle's finish.

▼Paint Chipping

Occurrence

Paint chipping occurs when gravel thrown in the air by another vehicle's tires hits your vehicle.

How to avoid paint chipping

Keeping a safe distance between you and the vehicle ahead reduces the chances of having your paint chipped by flying gravel.

NOTE

- The paint chipping zone varies with the speed of the vehicle. For example, when traveling at 90 km/h (56 mph), the paint chipping zone is 50 m (164 ft).
- In low temperatures a vehicle's finish hardens. This increases the chance of paint chipping.
- Chipped paint can lead to rust forming on your Mazda. Before this happens, repair the damage by using Mazda touch-up paint according to the instructions in this section. Failure to repair the affected area could lead to serious rusting and expensive repairs.

Exterior Care

Follow **all** label and container directions when using a chemical cleaner or polish. Read all warnings and cautions.

▼Maintaining the Finish

Washing

To help protect the finish from rust and deterioration, wash your Mazda thoroughly and frequently, at least once a month, with lukewarm or cold water.

If the vehicle is washed improperly, the paint surface could be scratched. Here are some examples of how scratching could occur.

Scratches occur on the paint surface when:

- The vehicle is washed without first rinsing off dirt and other foreign matter.
- The vehicle is washed with a rough, dry, or dirty cloth.
- The vehicle is washed at a car wash that uses brushes that are dirty or too stiff.
- Cleansers or wax containing abrasives are used.

NOTE

- Mazda is not responsible for scratches caused by automatic car washes or improper washing.
- Scratches are more noticeable on vehicles with darker paint finishes.

To minimize scratches on the vehicle's paint finish:

- Rinse off any dirt or other foreign matter using lukewarm or cold water before washing.
- Use plenty of lukewarm or cold water and a soft cloth when washing the vehicle. Do not use a nylon cloth.
- Rub gently when washing or drying the vehicle.
- Take your vehicle only to a car wash that keeps its brushes well maintained.
- Don't use abrasive cleansers or wax that contain abrasives.

⚠CAUTION

- Don't use steel wool, abrasive cleaners, or strong detergents containing highly alkaline or caustic agents on chrome-plated or anodized aluminum parts. This may damage the protective coating; also, cleaners and detergents may discolor or deteriorate the paint.
- To prevent damaging the antenna, remove it before entering a car wash facility or passing beneath a low overhead clearance.

Pay special attention to removing salt, dirt, mud, and other foreign material from the underside of the fenders, and make sure the drain holes in the lower edges of the doors and rocker panels are clean.

Insects, tar, tree sap, bird droppings, industrial fallout, and similar deposits can damage the finish if not removed immediately. When prompt washing with plain water is ineffective, use a mild soap made for use on vehicles.

Thoroughly rinse off all soap with lukewarm or cold water. Don't allow soap to dry on the finish.

After washing the vehicle, dry it with a clean chamois to prevent water spots from forming.

⚠ *WARNING*

Driving with Wet Brakes:
Driving with wet brakes is dangerous. Increased stopping distance or the vehicle pulling to one side when braking could result in a serious accident. Light braking will indicate whether the brakes have been affected. Dry the brakes by driving very slowly and applying the brakes lightly until brake performance is normal.

Waxing

Your vehicle needs to be waxed when water no longer beads on the finish. Always wash and dry the vehicle before waxing it. In addition to the vehicle body, wax the metal trim to maintain its luster.

1. Use wax which contains no abrasives. Waxes containing abrasive will remove paint and could damage bright metal parts.
2. Use a good grade of natural wax for metallic, mica, and solid colors.
3. When waxing, coat evenly with the sponge supplied or a soft cloth.
4. Wipe off the wax with a soft cloth.

NOTE

A spot remover to remove oil, tar, and similar materials will usually also take off the wax. Rewax these areas even if the rest of the vehicle doesn't need it.

▼ Repairing Damage to the Finish

Deep scratches or chips on the finish should be repaired promptly. Exposed metal quickly rusts and can lead to major repairs.

⚠ CAUTION

If your Mazda is damaged and needs metal parts repaired or replaced, make sure the body shop applies anti-corrosion materials to all parts, both repaired and new. This will prevent them from rusting.

▼ Bright-Metal Maintenance

- Use tar remover to remove road tar and insects. Never do this with a knife or similar tool.
- To prevent corrosion on bright-metal surfaces, apply wax or chrome preservative and rub it to a high luster.
- During cold weather or in coastal areas, cover bright-metal parts with a coating of wax or preservative heavier than usual. It would also help to coat them with noncorrosive petroleum jelly or some other protective compound.

⚠ CAUTION

Don't use steel wool, abrasive cleaners, or strong detergents containing highly alkaline or caustic agents on chrome-plated or anodized aluminum parts. This may result in damage to the protective coating and cause discoloration or paint deterioration.

▼ Underbody Maintenance

Road chemicals and salt used for ice and snow removal and solvents used for dust control may collect on the underbody. If not removed, they will speed up rusting and deterioration of such underbody parts as fuel lines, frame, floor pan, and exhaust system, even though these parts may be coated with anti-corrosive material.

Thoroughly flush the underbody and wheel housings with lukewarm or cold water at the end of each winter. Try also to do this every month.

Pay special attention to these areas because they easily hide mud and dirt. **It will do more harm than good to wet down the road grime without removing it.**

The lower edges of doors, rocker panels, and frame members have drain holes that should not be clogged. Water trapped there will cause rusting.

⚠ WARNING

Driving with Wet Brakes:
Driving with wet brakes is dangerous. Increased stopping distance or the vehicle pulling to one side when braking could result in a serious accident. Light braking will indicate whether the brakes have been affected. Dry the brakes by driving very slowly and applying the brakes lightly until brake performance is normal.

▼ Aluminum Wheel Maintenance

A protective coating is provided over the aluminum wheels. Special care is needed to protect this coating.

NOTE

- Don't use a wire brush or any abrasive cleaner, polishing compound, or solvent on aluminum wheels. They may damage the coating.
- Only use a mild soap or neutral detergent and always use a sponge or soft cloth to clean the wheels. Rinse thoroughly with lukewarm or cold water. Also, be sure to clean the wheels after driving on dusty or salted roads. This helps prevent corrosion.
- Avoid washing your vehicle in an automatic car wash that uses high-speed or hard brushes.
- If your aluminum wheels lose luster, wax the wheels.

Interior Care

▼Dashboard Precautions

Prevent caustic solutions such as perfume and cosmetic oils from contacting the dashboard. They'll damage and discolor it. If these solutions get on the dashboard, wipe them off immediately.

⚠CAUTION

Do not use glazing agents.
Glazing agents contain ingredients which may cause discoloration, wrinkling, cracks and peeling.

▼Cleaning the Upholstery and Interior Trim

Vinyl

Remove dust and loose dirt from vinyl with a whisk broom or vacuum cleaner. Clean vinyl with a leather-and-vinyl cleaner.

Leather*

Real leather isn't uniform and may have scars, scratches, and wrinkles. Clean it with a leather cleaner or mild soap.

Wipe it with a **damp** soft cloth; then dry and buff it with a **dry** soft cloth.

Fabric*

Remove dust and loose dirt from fabric with a whisk broom or vacuum cleaner. Clean it with a mild soap solution good for upholstery and carpets. Remove fresh spots immediately with a fabric spot cleaner.

To keep the fabric looking clean and fresh, take care of it. Otherwise its color will be affected, it can be stained easily, and its fire-resistance may be reduced.

⚠CAUTION

Use only recommended cleaners and procedures. Others may affect appearance and fire-resistance.

▼Cleaning the Lap/Shoulder Belt Webbing

Clean the webbing with a mild soap solution recommended for upholstery or carpets. Follow instructions. Don't bleach or dye the webbing; this may weaken it.

After cleaning the belts, thoroughly dry the belt webbing and make sure there is no remaining moisture before retracting them.

⚠WARNING

Damaged Seat Belt:
Using damaged seat belts is dangerous. In a collision, damaged belts cannot provide adequate protection. Have an Authorized Mazda Dealer replace damaged belts immediately.

 *Some models.

▼Cleaning the Window Interiors

If the windows become covered with an oily, greasy, or waxy film, clean them with glass cleaner. Follow the directions on the container.

⚠CAUTION

Don’t scrape or scratch the inside of the rear window. You may damage the rear window defroster grid.

9 Customer Information and Reporting Safety Defects

Important consumer information including warranties and add-on equipment.

Customer Assistance 9-2
Customer Assistance (U.S.A.) 9-2
Customer Assistance (Canada) 9-4
Customer Assistance (Puerto Rico) 9-7

Mazda Importer/Distributors 9-8
Importer/Distributor 9-8
Distributor in Each Area 9-8

Warranty 9-9
Warranties for Your Mazda 9-9
Outside the United States 9-10
Outside Canada 9-11
Registering Your Vehicle in A Foreign Country (Except United States and Canada) 9-12
Add-On Non-Genuine Parts and Accessories 9-13

Cell Phones 9-14
Cell Phones Warning 9-14

Uniform Tire Quality Grading System (UTQGS) 9-15
Uniform Tire Quality Grading System (UTQGS) 9-15

Reporting Safety Defects 9-17
Reporting Safety Defects 9-17

Service Publications 9-18
Service Publications 9-18

Customer Assistance (U.S.A.)

Your complete and permanent satisfaction is our business. We are here to serve you. All Authorized Mazda Dealers have the knowledge and the tools to keep your Mazda vehicle in top condition.
If you have any questions or recommendations for improvement regarding the service of your Mazda vehicle or servicing by Mazda Dealer personnel, we recommend that you take the following steps:

NOTE
If it becomes necessary to have the components or wiring system for the supplementary restraint system modified to accommodate a person with certain medical conditions in accordance with a certified physician, contact an Authorized Mazda Dealer.

▼STEP 1: Contact Your Mazda Dealer

Discuss the matter with an Authorized Mazda Dealer. This is the quickest and best way to address the issue. If your concern has not been resolved by the CUSTOMER RELATIONS, SALES, SERVICE, or PARTS MANAGER, then please contact the GENERAL MANAGER of the dealership or the OWNER.

▼STEP 2: Call the Mazda National Customer Assistance Center #800

If for any reason you feel the need for further assistance after contacting your dealership management, you can reach Mazda North American Operations by one of three ways.

Log on at: www.mazdausa.com
Answers to many questions, including how to locate or contact a local Mazda dealership in the U.S., can be found here. You can also send e-mail to Mazda by clicking "contact" at this site.

By phone at:1 (800) 222-5500

By letter at:
Attn: Customer Assistance

Mazda North American Operations
7755 Irvine Center Drive
Irvine, CA 92618-2922
P.O. Box 19734
Irvine, CA 92623-9734

Customer Assistance

In order to serve you efficiently and effectively, please help us by providing the following information:

1. Your name, address, and telephone number
2. Year and model of vehicle
3. Vehicle Identification Number (17 digits, noted on your registration or title or located on the upper driver's side corner of the dash)
4. Purchase date and current mileage
5. Your dealer's name and location
6. Your question(s)

If you live outside the U.S.A., please contact your nearest Mazda Distributor.

Customer Assistance (Canada)

▼Satisfaction Review Process

Your complete and permanent satisfaction is of primary concern to Mazda. All Authorized Mazda Dealers have both the knowledge and tools to keep your Mazda in top condition. In our experience, any questions, problems, or complaints regarding the operation of your Mazda or any other general service transactions are most effectively resolved by your dealer. If the cause of your dissatisfaction cannot adequately be addressed by normal dealership procedures, we recommend that you take the following steps:

▼STEP 1: Contact the Mazda Dealer

Discuss the matter with a member of dealership management. If the Service Manager has already reviewed your concerns, contact the owner of the dealership or its General Manager.

▼STEP 2: Contact the Mazda Regional Office

If you feel that you still require assistance, ask the dealer Service Manager to arrange for you to meet the local Mazda Service Representative. If more expedient, contact Mazda Canada Inc.Regional Office nearest you for such arrangements. Regional Office address and phone numbers are shown (page 9-6).

▼STEP 3: Contact the Mazda Customer Relations Department

If still not substantially satisfied, contact the Customer Relations Department, Mazda Canada Inc., 305 Milner Avenue, Suite 400 Scarborough, Ontario M1B 3V4 Canada
TEL:1 (800) 263-4680.
Provide the Department with the following information:

1. Your name, address and telephone number
2. Year and model of vehicle
3. Vehicle Identification Number (VIN). Refer to the "Vehicle Identification Labels" page of section 10 of this manual for the location of the VIN.
4. Purchase date
5. Present odometer reading
6. Your dealer’s name and location
7. The nature of your problem and/or cause of dissatisfaction

The Department, in cooperation with the local Mazda Service Representative, will review the case to determine if everything possible has been done to ensure your satisfaction.

Please recognize that the resolution of service problems in most cases requires the use of your Mazda dealer's service facilities, personnel and equipment. We urge you to follow the above three steps in sequence therefore for most effective results.

▼ Mediation/Arbitration Program

Occasionally a customer concern cannot be resolved through Mazda's Customer Satisfaction Program. If after exhausting the procedures in this manual your concern is still not resolved, you have another option.

Mazda Canada Inc. participates in an arbitration program administered by the Canadian Motor Vehicle Arbitration Plan (CAMVAP). CAMVAP will advise you about how your concern may be reviewed and resolved by an independent third party through binding arbitration.

Your complete satisfaction is the goal of Mazda Canada Inc. and our dealers.
Mazda's participation in CAMVAP makes a valuable contribution to our achieving that goal. There is no charge for using CAMVAP. CAMVAP results are fast, fair and final as the award is binding on both you and Mazda Canada Inc.

▼ Canadian Motor Vehicle Arbitration Plan (CAMVAP)

If a specific item of concern arises, where a solution cannot be reached between an owner, Mazda, and/or one of it's dealers (that all parties cannot agree upon), the owner may wish to use the services offered by the Canadian Motor Vehicle
Arbitration Plan (CAMVAP).

CAMVAP uses the services of Provincial Administrators to assist consumers in scheduling and preparing for their arbitration hearings. However, before you can proceed with CAMVAP you must follow your Mazda dispute resolution process as outlined previously.

CAMVAP is fully implemented in all provinces and territories.
Consumers wishing to obtain further information about the Program can obtain an information booklet from your dealer, the Provincial Administrator or the Canadian Motor Vehicle Arbitration Plan Office at the following address or telephone number.

Canadian Motor Vehicle Arbitration Office
235 Yorkland Boulevard, suite 300
North York, Ontario
M2J 4Y8
1 (800) 207-0685

Customer Assistance

Provincial Administrators may be reached locally as listed below:

Province/Territory	CAMVAP Number
British Columbia & Yukon Territories	(604) 681-0312
Alberta & Northwest Territories	(403) 426-0650
Saskatchewan	(306) 352-9259
Manitoba	(204) 942-7166
Ontario	(416) 596-8824
Atlantic Canada	(902) 422-5413
Quebec	(418) 649-1330

▼ Regional Offices

REGIONAL OFFICES	AREAS COVERED
MAZDA CANADA INC. WESTERN REGION 8171 ACKROYD ROAD SUITE 2000 RICHMOND B.C. V6X 3K1 (604) 303-5670	ALBERTA, BRITISH COLUMBIA, MANITOBA, SASKATCHEWAN, YUKON
MAZDA CANADA INC. CENTRAL/ATLANTIC REGION 305 MILNER AVENUE SUITE 400 SCARBOROUGH, ONTARIO M1B 3V4 1 (800) 263-4680	ONTARIO, NEW BRUNSWICK, NOVA SCOTIA, PRINCE EDWARD ISLAND, NEWFOUNDLAND
MAZDA CANADA INC. QUEBEC REGION 6111 ROUTE TRANS CANADIENNE POINTE CLAIRE, QUEBEC H9R 5A5 (514) 694-6390	QUEBEC

Customer Assistance (Puerto Rico)

Your complete and permanent satisfaction is our business. That is why all Authorized Mazda Dealers have the knowledge and the tools to keep your Mazda vehicle in top condition.
If you have any questions or recommendations for improvement regarding the service of your Mazda vehicle or servicing by Mazda Dealer personnel, we recommend that you take the following steps:

▼STEP 1

Discuss the matter with an Authorized Mazda Dealer. This is the quickest and best way to address the issue. If your concern has not been resolved by the CUSTOMER RELATIONS, SALES, SERVICE, or PARTS MANAGER, then please contact the GENERAL MANAGER of the dealership or the OWNER.

▼STEP 2

If, after following STEP 1, you feel the need for further assistance, please contact your area's Mazda representative (Indicated on the next page).

Please help us by providing the following information:

1. Your name, address, and telephone number
2. Year and model of vehicle
3. Vehicle Identification Number (17 digits, noted on your registration or title or located on the upper driver's side corner of the dash)
4. Purchase date and current mileage
5. Your dealer's name and location
6. Your question(s)

Mazda Importer/Distributors

Importer/Distributor

▼U.S.A.

Mazda North American Operations
7755 Irvine Center Drive
Irvine, CA 92618-2922 U.S.A.
P.O. Box 19734
Irvine, CA 92623-9734 U.S.A.
TEL:1 (800) 222-5500 (in U.S.A.)
(949) 727-1990 (outside U.S.A.)

Distributor in Each Area

▼CANADA

Mazda Canada Inc.
305 Milner Avenue, Suite 400
Scarborough, Ontario M1B 3V4 Canada
TEL:1 (800) 263-4680 (in Canada)
(416) 609-9909 (outside Canada)

▼PUERTO RICO

Plaza Motors Corp. (Mazda de Puerto Rico)
P.O. Box 362722, San Juan, Puerto Rico 00936-2722
TEL: (787) 641-9300

▼GUAM

Triple J Motors
157 South Marine Drive, Tamuning, GUAM 96911 USA
P.O. Box 6066 Tamuning, Guam 96931
TEL: (671) 649-6555

▼SAIPAN

Pacific International Marianas, Inc. (d.b.a. Midway Motors)
P.O. Box 887 Saipan, MP 96950
TEL: (670) 234-7524

Triple J Saipan, Inc. (d.b.a. Triple J Motors)
P.O. Box 500487 Saipan, MP 96950-0487
TEL: (670) 234-7133/3051

▼AMERICAN SAMOA

Polynesia Motors, Inc.
P.O. Box 1120, Pago Pago, American Samoa 96799
TEL: (684) 699-9347

Warranties for Your Mazda

- New Vehicle Limited Warranty
- Distributor Major Component Limited Warranty (Canada only)
- Safety Restraint System Limited Warranty
- Anti-perforation Limited Warranty
- Federal Emission Control Warranty (U.S.A. only)
  - Emission Defect Warranty
  - Emission Performance Warranty
- California Emission Control Warranty (U.S.A. only)
- Emission Control Warranty (Canada only)
- Replacement Parts and Accessories Limited Warranty
- Tire Warranty

NOTE
Detailed warranty information is provided with your Mazda.

Outside the United States

Government regulations in the United States require that automobiles meet specific emission regulations and safety standards. Therefore, vehicles built for use in the United States may differ from those sold in other countries.

The differences may make it difficult or even impossible for your vehicle to receive satisfactory servicing in other countries. We strongly recommend that you NOT take your Mazda outside the United States. However, in the event that you are moving to Canada permanently, Mazda vehicles built for use in the United States could be eligible for exportation to Canada with specific vehicle modifications to comply with the Canadian Motor Vehicle Safety requirements (CMVSS).

NOTE
The above is applicable for a permanent import/export situation and not related to travelers on vacation.

You may have the following problems if you do take your vehicle outside of the United States:

- Recommended fuel may be unavailable. Any kind of leaded fuel or low-octane fuel will affect vehicle performance and damage the emission controls and engine.
- Proper repair facilities, tools, testing equipment, and replacement parts may not be available.

Please refer to your Manufacturer’s Warranty Booklet for more information.

Outside Canada

Government regulations in Canada require that automobiles meet specific emission regulations and safety regulations. Therefore, vehicles built for use in Canada may differ from those sold in other countries.

The differences may make it difficult or even impossible for your vehicle to receive satisfactory servicing in other countries. We strongly recommend that you NOT take your Mazda outside Canada. However, in the event that you are moving to the United States permanently, Mazda vehicles built for use in Canada could be eligible for exportation to the United States with specific vehicle modifications to comply with the United States Federal Motor Vehicle Safety Standards (FMVSS).

NOTE
The above is applicable for a permanent import/export situation and not related to travelers on vacation.

You may have the following problems if you do take your vehicle outside of Canada:

- Recommended fuel may be unavailable. Any kind of leaded fuel or low-octane fuel will affect vehicle performance and damage the emission controls and engine.
- Proper repair facilities, tools, testing equipment, and replacement parts may not be available.

Please refer to your Manufacturer’s Warranty Booklet for more information.

Registering Your Vehicle in A Foreign Country (Except United States and Canada)

Government regulations in your country could require that automobiles meet specific emission and safety standards.
Vehicles built for your country may differ from those built for other countries. In addition to registration problems, satisfactory service may be difficult or even impossible in another country.

The fuel specified for your vehicle may be unavailable.

Parts, servicing techniques, and tools necessary to maintain and repair your vehicle may be unavailable.

There might not be an Authorized Mazda Dealer in the country you plan to take your vehicle.

The Mazda warranty is valid only in certain countries.

Add-On Non-Genuine Parts and Accessories

Non-genuine parts and accessories for Mazda vehicles can be found in stores.
These may fit your vehicle, but they are not approved by Mazda for use with Mazda vehicles. When you install non-genuine parts or accessories, they could affect your vehicle's performance or safety system; the Mazda warranty doesn't cover this. Before you install any non-genuine parts or accessories, consult an Authorized Mazda Dealer.

⚠ *WARNING*

Installation of Non-Genuine Parts or Accessories:
Installation of non-genuine parts or accessories is dangerous. Improperly designed parts or accessories could seriously affect your vehicle's performance or safety system. This could cause you to have an accident or increase your chances of injuries in an accident. Always consult an Authorized Mazda Dealer before you install non-genuine parts or accessories.

Add-On Electrical and Electronic Equipment:
Incorrectly choosing or installing improper add-on equipment or choosing an improper installer is dangerous. Essential systems could be damaged, causing engine stalling, air-bag (SRS) activation, ABS inactivation, or a fire in the vehicle.
Be very careful in choosing and installing add-on electrical equipment, such as mobile telephones, two-way radios, stereo systems, and car alarm systems.

Mazda assumes no responsibility for death, injury, or expenses that may result from the installation of add-on non-genuine parts or accessories.

Cell Phones

Cell Phones Warning

⚠ *WARNING*

Use of Cell Phones and Other Devices by Driver:
Use of any electrical devices such as cell phones, computers, portable radios, vehicle navigation or other devices by the driver while the vehicle is moving is dangerous. Dialing a number on a cell phone while driving also ties-up the driver's hands. Use of these devices will cause the driver to be distracted and could lead to a serious accident. If a passenger is unable to use the device, pull off the right-of-way to a safe area before use. If use of a cell phone is necessary despite this warning, use a hands-free system to at least leave the hands free to drive the vehicle. Never use a cell phone or other electrical devices while the vehicle is moving and, instead, concentrate on the full-time job of driving.
Please comply to the legal regulations concerning the use of communication equipment in vehicles in your country.

Uniform Tire Quality Grading System (UTQGS)

This information relates to the tire grading system developed by the U.S. National Highway Traffic Safety Administration for grading tires by tread wear, traction, and temperature performance.

▼ Tread Wear

The tread wear grade is a comparative rating based on the wear rate of the tire when tested under controlled conditions on a specified government test course.
For example, a tire graded 150 would wear one-and-a-half times as well on the government course as a tire graded 100.

The relative performance of tires depends upon the actual conditions of their use, however, and may depart significantly from the norm because of variations in driving habits, service practices and differences in road characteristics and climate.

▼ Traction-AA, A, B, C

The traction grades, from highest to lowest, are AA, A, B, and C. These grades represent the tire's ability to stop on wet pavement as measured under controlled conditions on specified government test surfaces of asphalt and concrete. A tire marked C may have poor traction performance.

⚠ *WARNING*

The traction grade assigned to this tire is based on braking (straight ahead) traction tests and does not include acceleration cornering (turning), hydroplaning, or peak traction characteristics.

▼ Temperature-A, B, C

The temperature grades A (the highest), B, and C, represent the tire's resistance to the generation of heat and its ability to dissipate heat when tested under controlled conditions on a specified indoor laboratory test wheel.
Sustained high temperature can cause the material of the tire to degenerate and reduce tire life, and excessive temperatures can lead to sudden tire failure.

Grade C corresponds to a level of performance which all passenger vehicle tires must meet under the Federal Motor Vehicle Safety Standard No. 109. Grades B and A represent higher levels of performance on the laboratory test wheel than the minimum required by law.

Uniform Tire Quality Grading System (UTQGS)

⚠ *WARNING*

The temperature grade for this tire is established for a tire that is properly inflated and not overloaded. Excessive speed, underinflation, or excessive loading, either separately or in combination, can cause heat buildup and possible tire failure.

These grades will be added to the sidewalls of passenger vehicle tires over the next several years according to a schedule established by the NHTSA and the tire manufacturers.

The grade of tires available as standard or optional equipment on Mazda vehicle may vary with respect to grade.

ALL PASSENGER VEHICLE TIRES MUST CONFORM TO THESE GRADES AND TO ALL OTHER FEDERAL TIRE-SAFETY REQUIREMENTS.

▼Uniform Tire Quality Grading

Quality grades can be found where applicable on the tire sidewall between tread shoulder and maximum section width.
For example:
Treadwear 200 Traction AA Temperature A

UTQGS MARK (example)

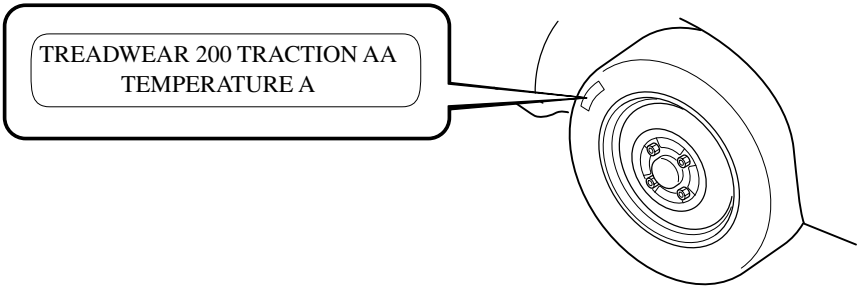

Reporting Safety Defects

If you believe that your vehicle has a defect which could cause a crash or could cause injury or death, you should immediately inform the National Highway Traffic Safety Administration (NHTSA) in addition to notifying Mazda Motor Corporation (Your Mazda Importer/Distributor).

If NHTSA receives similar complaints, it may open an investigation, and if it finds that a safety defect exists in a group of vehicles, it may order a recall and remedy campaign. However, NHTSA cannot become involved in individual problems between you, your dealer, or Mazda Motor Corporation (Your Mazda Importer/Distributor).

To contact NHTSA, you may either call the Auto Safety Hotline toll-free at 1 (800) 424-9393 (or 366-0123 in Washington, D.C. area) or write to: NHTSA, U.S. Department of Transportation. Washington, D.C. 20590. You can also obtain other information about motor vehicle safety from the Hotline.

NOTE

If you live in the U.S.A., all correspondence to Mazda Motor Corporation should be forwarded to:

Mazda North American Operations
7755, Irvine Center Drive
Irvine, California 92618-2922
P.O. Box 19734
Irvine, CA 92623-9734
Customer Assistance Center or toll free at 1 (800) 222-5500

If you live outside of the U.S.A., please contact the nearest Mazda Distributor shown (page 9-8) in this booklet.

Service Publications

Factory-authorized Mazda service publications are available for owners who wish to do some of their own maintenance and repair.

When requesting any of our publications through an Authorized Mazda Dealer, refer to the chart below.

If they don't have what you need in stock, they can order it for you.

PUBLICATION ORDER NUMBER	PUBLICATION DESCRIPTION
9999-95-038B-04	2004 WORKSHOP MANUAL (English)
9999-95-024G-04	2004 WIRING DIAGRAM (English)
9999-95-029C-04 (U.S.A. only)	2004 OWNER'S MANUAL
9999-EC-029C-04 (Canada only)	2004 OWNER'S MANUAL
9999-PR-029C-04 (Puerto Rico only)	2004 OWNER'S MANUAL

▼WORKSHOP MANUAL:

Covers recommended maintenance and repair procedures of the drive train, body and chassis.

▼WIRING DIAGRAM:

Provides electrical schematics as well as component location for the entire electrical system.

▼OWNER'S MANUAL:

This booklet contains information regarding the proper care and operation of your vehicle. This is not a technician's manual.

10 Specifications

Technical information about your Mazda.

Identification Numbers 10-2
Vehicle Information Labels 10-2

Specifications 10-4
Specifications 10-4

Vehicle Information Labels

▼Vehicle Identification Number

The vehicle identification number legally identifies your vehicle. The number is on a plate attached to the left top side of the dashboard. This plate can easily be seen through the windshield.

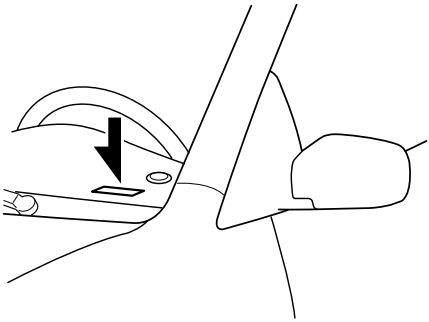

▼Motor Vehicle Safety Standard Label

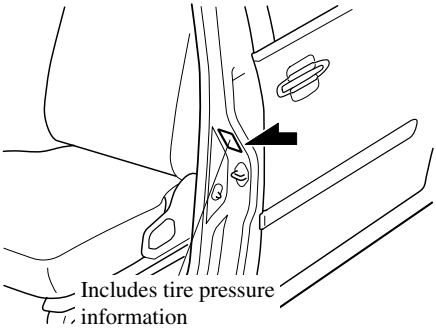

▼Chassis Number

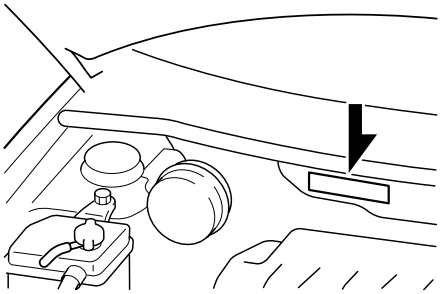

▼Vehicle Emission Control Information Label

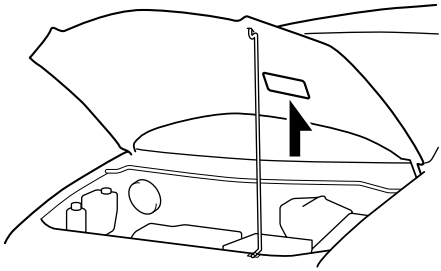

▼Tire Pressure Label

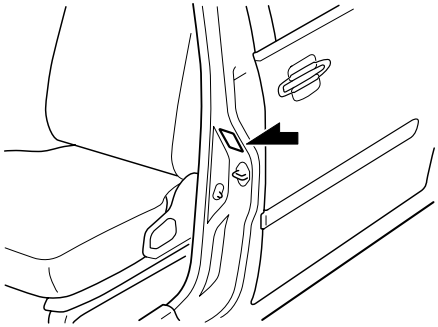

▼Engine Number

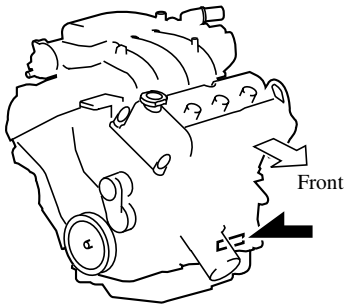

Specifications

▼Engine

Item	Classification
Type	DOHC-24V 60°V, 6-cylinder
Bore × Stroke	89.0 × 79.5 mm (3.50 × 3.13 in)
Displacement	2,967 ml (2,967 cc, 181.0 cu in)
Compression ratio	10.0

▼Electrical System

Item	Classification
Battery	12V-48AH/5HR MF
	12V-55AH/5HR MF
Alternator	12 V - 110 A
Starter	12 V - 1.4 kW
Spark-plug number	AGSF 32WM
Spark-plug gap	1.32—1.42 mm (0.051—0.057 in)

▼Lubricant Quality

Lubricant	Classification	
	API Service	ILSAC
Engine oil*	SL	GF-III

* Refer to the recommended SAE viscosity numbers on page 8-10.

Lubricant	Classification
Automatic transaxle fluid	ATF M-III or equivalent (e.g. Dexron® III)
Power steering fluid	ATF M-III or equivalent (e.g. Dexron® III)
Brake fluid	SAE J1703, or FMVSS116 DOT-3

▼Capacities

(Approximate Quantities)

Item		Unit		
		L	US qt	Imp qt
Engine oil	With oil filter replacement	5.7	6.0	5.0
	Without oil filter replacement	5.2	5.5	4.6
Coolant	With rear heater	12.0	12.7	10.6
	Without rear heater	10.2	10.8	9.3
Automatic transaxle fluid		9.7	10.3	8.5
Washer fluid	With 4-Seasons package	5.5	5.8	4.8
	Without 4-Seasons package	2.2	2.3	1.9
Fuel tank		75	19.8 (US gal)	16.5 (Imp gal)

Check oil and fluid levels with dipsticks or reservoir gauges.

▼Dimensions

Item		Model
Overall length	Without GFX Package	4,807mm (189.3 in), 4,821mm (189.8 in)*1
	With GFX Package	4,813mm (189.5 in), 4,833mm (190.3 in)*1
Overall width		1,830mm (72.1 in)
Overall height		1,745 mm (68.7 in), 1,755 mm (69.1 in)*2
Front tread		1,540mm (60.6 in)
Rear tread		1,545mm (60.8 in)*3, 1,550mm (61.0 in)*4
Wheelbase		2,840mm (111.8 in)

*1 With license plate holder
*2 17 inch wheel vehicle
*3 Rear drum brake
*4 Rear disc brake

▼Weights

Item		Weight
GVWR (Gross Vehicle Weight Rating)		2,386kg (5,260 lb)
GAWR (Gross Axle Weight Rating)	Front	1,189kg (2,621 lb)
	Rear	1,218kg (2,685 lb)

▼Air Conditioner

Refrigerant complies with SAE J639	Maximum operating charge	
HFC134a (R-134a)	Front air-conditioner	0.6 kg (21.2 oz)
	Front and rear air-conditioner	0.8 kg (28.2 oz)

▼Light Bulbs

Exterior light

Light bulb	Category		
	Wattage	ECE R	SAE
Headlights	60/55	HB2	—
Front turn signal lights/Front side-marker lights	21/5	—	#1157NA
Fog lights*	55	H11	—
Parking lights	5	W5W	#168
Side turn signal lights*1	5	WY5W	—
Rear turn signal lights	21	WY21W	—
Brake lights/Taillights	21/5	W21/5W	#7443
Taillights/Rear side-marker lights	5	W5W	#168
High-mount brake light	5	W5W	#168
Reverse lights	16	W16W	#921
License plate lights	5	W5W	—

*1Bulb replacement is not possible because it is built into the unit. Replace the unit.

Interior light

Light bulb	Category	
	Wattage	ECE R
Overhead lights/Map lights	5	W5W
Overhead light	8	—
Luggage compartment light	8	—
Courtesy lights	5	W5W
Vanity mirror lights*	3	—

 *Some models.

▼Tires

NOTE
The tires have been optimally matched with the chassis of your vehicle. When replacing tires, Mazda recommends that you replace tires of the same type originally fitted to your vehicle. For details, contact an Authorized Mazda Dealer.

Check the tire pressure label for tire size and inflation pressure. Refer to Tire Inflation Pressure on page 8-27.

Standard tire

Item	Model		
Tire size	205/65R15 94H	215/60R16 95H	P215/60R17 95H
Rim size	15×6JJ*1, 15×6J*2	16×6-1/2J	17×7J
Inflation pressure	240 kPa (35 psi or lb/po^2)	240 kPa (35 psi or lb/po^2)	240 kPa (35 psi or lb/po^2)

*1 Steel wheel
*2 Aloy wheel

Temporary spare tire

Tire size	Inflation pressure
T135/90D15	420 kPa (60 psi)

▼Fuses

Refer to the fuse rating on page 8-38.

11 Index

A

Accessory Socket 6-52
Add-On Non-Genuine Parts and Accessories 9-13
Air Bag Systems 2-56
Air Filter 8-19
Antenna 6-14
Anti-Lock Brake System (ABS) 5-7
    Warning light 5-8
Appearance Care 8-43
Ashtray 6-45
Audio System 6-14
    Audio control switch 6-38
    Audio set 6-21
    Operating tips for audio system 6-14
    Safety certification 6-40
Automatic Transaxle
    Driving tips 5-13
    Fluid 8-16
    Overdrive 5-12
    Shift-lock override 5-12
    Shift-lock system 5-11
    Transaxle ranges 5-10

B

Battery
    Emergency starting 7-17
    Maintenance 8-24
    Specifications 10-4
Beep Sounds
    Ignition key reminder 5-33
    Lights-on reminder 5-33
    Power sliding door beep 5-33
    Seat belt warning beep 5-33
Before Starting the Engine 4-6
    After getting in 4-6
    Before getting in 4-6

B

Body Lubrication 8-19
Bottle Holder 6-48
Brake
    Fluid 8-15
Brakes
    Anti-lock brake system (ABS) 5-7
    Foot brake 5-4
    Pad wear indicator 5-8
    Parking brake 5-5
    Warning light 5-6
Break-In Period 4-7
Bulb Replacement 8-31

C

Capacities 10-5
Carbon Monoxide 4-5
Cargo Securing Loops 6-51
Catalytic Converter 4-3
Cell Phones 9-14
Child Restraint
    Child restraint precautions 2-41
    Installing child-restraint systems 2-45
    LATCH child-restraint systems 2-53
Child Safety Locks for Rear Doors 3-12
Cigarette Lighter 6-44
Climate Control System 6-2
    Gas specifications 10-5
Courtesy Lights 6-44
Cruise Control 5-14
Cup Holder 6-46
Customer Assistance 9-2

D

Dashboard Illumination 5-23
Daytime Running Lights 5-35
Defroster
Rear window 5-38
Dimensions 10-5
Door Locks 3-8
Driving In Flooded Area 4-11
Driving Tips 4-7
Automatic transaxle 5-13
Break-in period 4-7
Driving in flooded area 4-11
Hazardous driving 4-8
Money-saving suggestions 4-7
Rocking the vehicle 4-9
Winter driving 4-9

E

Easy Closure 3-12
Emergency Starting 7-17
Flooded engine 7-17
Jump-starting 7-18
Push-starting 7-21
Emergency Towing 7-22
Emission Control System 4-3
Engine
Coolant 8-12
Exhaust gas 4-5
Hood release 3-24
Oil 8-10
Overheating 7-15
Starting 5-3
Engine Compartment Overview 8-9
Engine Coolant
Overheating 7-15
Engine Coolant Temperature
Gauge 5-22
Exhaust Gas 4-5

E

Exterior Care 8-45
Eyeglass Holder 6-49

F

Flasher
Hazard warning 5-39
Headlights 5-34
Flat Tire 7-3
Changing 7-8
Spare tire and tool storage 7-3
Fluids
Classification 10-4
Owner maintenance 8-7
Fog Lights 5-36
Foot Brake 5-4
Front Console 6-50
Front Seats
(Electrically Operated Seats) 2-8
Front Seats
(Manually Operated Seats) 2-3
Fuel
Filler lid and cap 3-23
Gauge 5-23
Requirements 4-2
Tank capacity 10-5
Fuses 8-38
Panel description 8-40
Replacement 8-38

G

Gauges 5-20
Glove Box 6-50

H

Hazard Warning Flasher 5-39
Hazardous Driving 4-8
Headlights
Control 5-34
Flashing 5-34
High-low beam 5-34
On reminder 5-34
Hood Release 3-24
Horn 5-39

I

Ignition
Keys 3-2
Switch 5-2
Illuminated Entry System 6-42
Immobilizer System 3-28
Indicator Lights 5-24
Cruise Main 5-32
Cruise set 5-32
Headlight high-beam 5-31
O/D OFF 5-31
Security 5-30
Shift position 5-31
TCS 5-31
TCS OFF 5-32
Turn-signal/hazard warning 5-32
Instrument Cluster 5-20
Interior Care 8-48
Interior Lights 6-42

J

Jump-Starting 7-18

K

Keyless Entry System 3-3
Keys 3-2

L

Label Information 10-2
Lane-Change Signals 5-35
Liftgate 3-18
Light Bulbs
Replacement 8-31
Specifications 10-6
Lighter 6-44
Lighting Control 5-34
Lubricant Quality 10-4
Luggage Compartment Light 6-44

M

Maintenance
Introduction 8-2
Owner maintenance
precautions 8-8
Owner maintenance schedule 8-7
Scheduled 8-3
Map Lights 6-43
Meters and Gauges 5-20
Mirrors
Outside mirrors 3-33
Rearview mirror 3-34
Money-Saving Suggestions 4-7

O

Odometer and Trip Meter 5-21
Outside Mirrors 3-33
Overhead Console 6-49
Overhead Lights 6-42
Overheating 7-15
Overloading 4-11

P

Paint Damage 8-43
Parking Brake 5-5
Parking in an Emergency 7-2
Power Door Locks 3-10
Power Sliding Doors 3-13
Power Steering 5-14
    Fluid 8-16
Power Windows 3-19
Push-Starting 7-21

R

Rear Console 6-51
Rear Door Child Safety Locks 3-12
Rear Quarter Windows 3-22
Rear Window Defroster 5-38
Rear Window Washer 5-38
Rear Window Wiper 5-38
Rearview Mirror 3-34
Recreational Towing 7-23
Registering Your Vehicle in
A Foreign Country 9-12
Rocking the Vehicle 4-9

S

Safety Defects, Reporting 9-17
Seat Belt System
    2-point type 2-37
    3-point type 2-33
    Automatic locking 2-32
    Emergency locking 2-32
    Extender 2-39
    Pregnant women 2-31
    Pretensioner and load
    limiting 2-35
    Seat belt precautions 2-30
    Warning beep 2-40
    Warning light 2-40
Seats
    Flat folding 2-28
    Front seat
    (Electrically operated seats) 2-8
    Front seat
    (Manually operated seats) 2-3
    Second-row seats 2-13
    Third-Row Seat 2-20
Second-row seats 2-13
Security System
    Immobilizer system 3-28
    Theft-deterrent system 3-31
Service Publications 9-18
Shopping Bag Hooks 6-52
Side Extention Sunvisors 6-41
Spare Tire and Tool Storage 7-3
Specifications 10-4
Speedometer 5-21
SRS Air Bags
    How the Air Bags Work 2-63
    Supplemental restraint systems
    precautions 2-56
Starting the Engine 5-3
Steering Wheel 3-33
    Horn 5-39

S

Storage Box 6-50
Storage Compartments 6-49
    Cargo securing loops 6-51
    Eyeglass holder 6-49
    Front console 6-50
    Glove box 6-50
    Overhead console 6-49
    Rear console 6-51
    Shopping bag hooks 6-52
    Storage box 6-50
    Under seat tray 6-50
Sunroof/Moonroof 3-25
Sunshade 3-27
Sunvisors 6-41

T

Tachometer 5-22
Temporary Spare Tire 8-29
Theft-Deterrent System 3-31
Third-row seat 2-20
Tiedown
    Hook 7-23
Tires
    Flat tire 7-3
    Inflation pressure 8-27
    Replacement 8-29
    Rotation 8-28
    Snow tires 4-10
    Spare tire and tool storage 7-3
    Specifications 10-7
    Tire chains 4-10
    Uniform tire quality
    grading system (UTQGS) 9-15
Tool 7-3
Towing
    Description 7-22
    Emergency towing 7-22

T

    Recreational towing 7-23
    Trailer towing 4-12
Traction Control System (TCS) 5-18
    TCS indicator light 5-18
    TCS OFF indicator light 5-19
    TCS OFF switch 5-19
Trailer Towing 4-12
Trip Meter 5-21
Turn and Lane-Change Signals 5-35

U

Under Seat Tray 6-50

V

Vanity Mirrors 6-41
Vehicle Information Labels 10-2

W

Warning Lights 5-24
    ABS 5-29
    Air bag system 5-29
    Brake system 5-26
    Charging system 5-27
    Check engine 5-28
    Door-ajar 5-30
    Engine oil pressure 5-28
    Front seat belt pretensioner
    system 5-29
    Immobilizer system 5-30
    Low fuel 5-30
    Seat belt 5-30
Warranty 9-9
Washer Fluid 8-18
Weights 10-5
Wheel Replacement 8-30

W

Windows
Power windows 3-19
Rear quarter windows 3-22
Windshield Washer 5-37
Windshield Wipers 5-37
Blades replacement 8-20
Winter Driving 4-9